IPS15-B

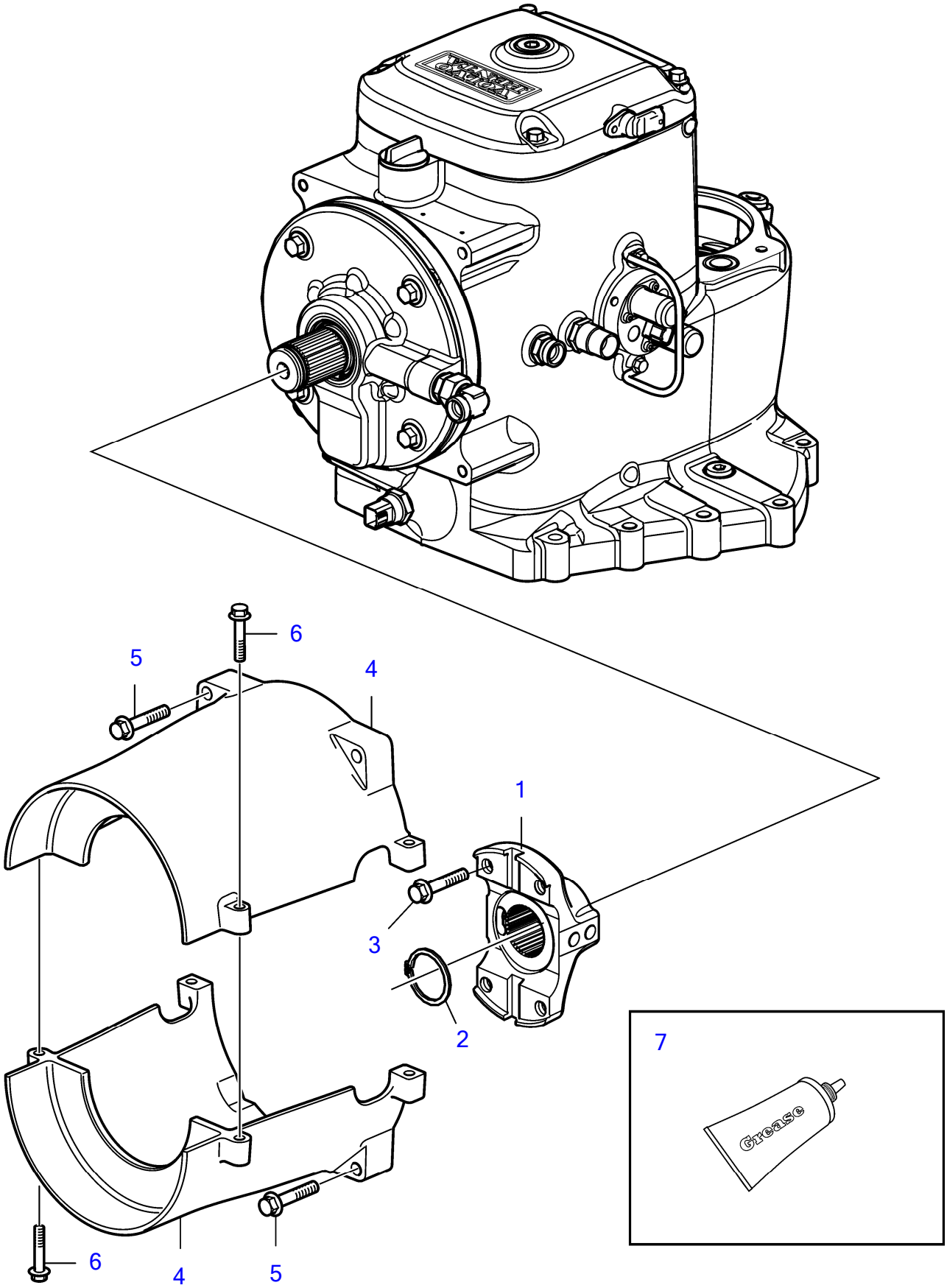

28824

IPS15-B

REF	PART NO.	QTY	DESCRIPTION	SEE SEC.	NOTES
1	22328794	1	Companion flange		
2	990889	1	Snap ring		
3	984850	4	Flange screw		
4	3847628	2	Protecting casing		
5	991609	4	Flange screw		
6	991607	4	Flange screw		
7	828250	1	Lubricating grease		
			・Bulletin P-18-4-6	P-18-4-6-EN	Water resistant grease for grease gun