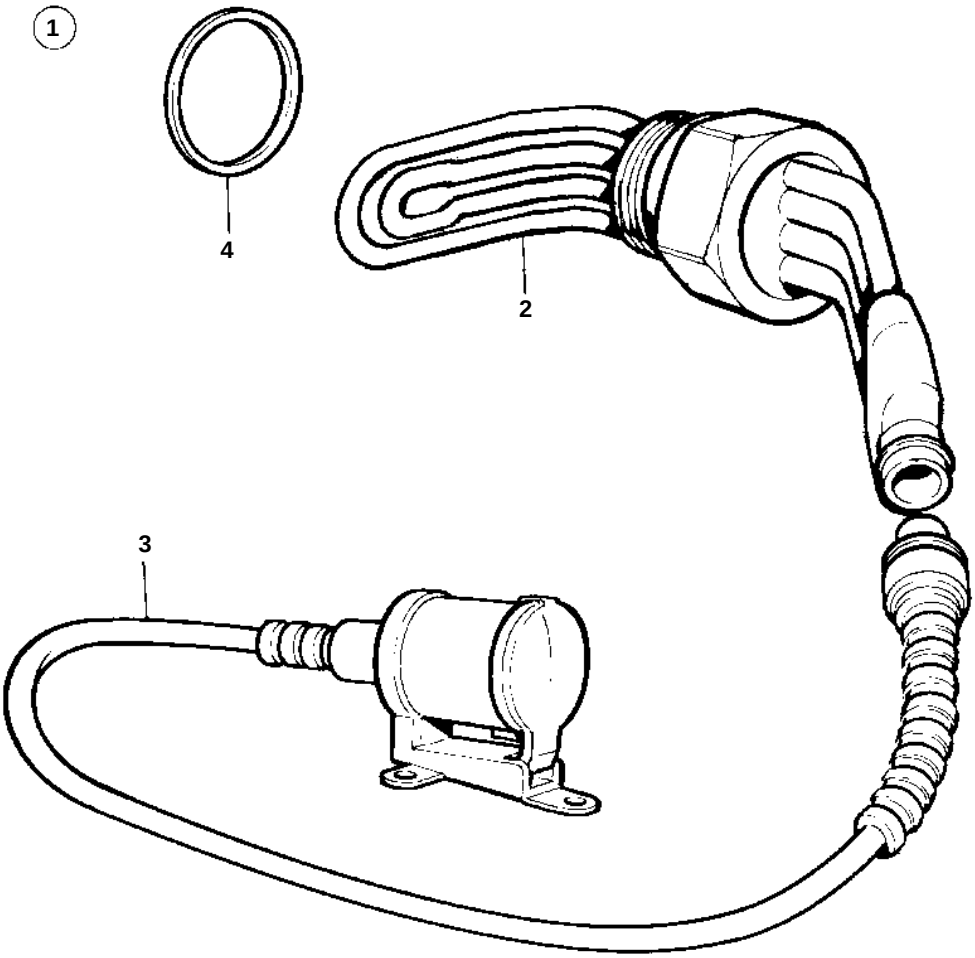

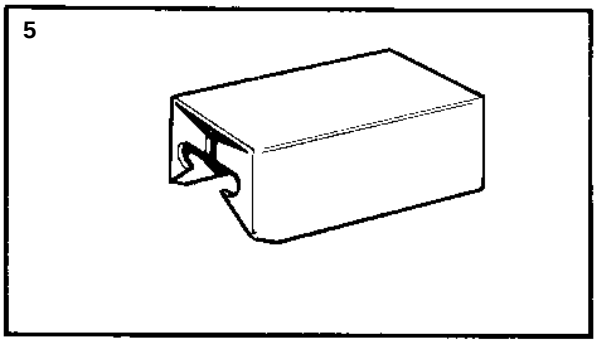

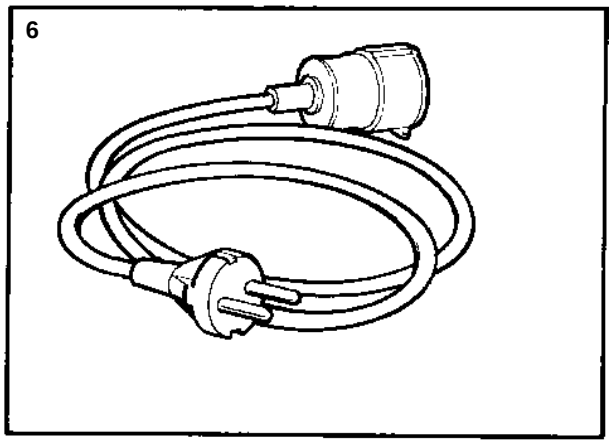

10878

REF	PART NO.	QTY	DESCRIPTION	NOTES
1	888447	1	Engine heater	220-240V, 1500W
2	1622521	1	· Radiator	
3	3589627	1	· Cable	L=5000mm
4	469328	1	· Gasket	
5	1622523	1	· Heat shield	
6	3986351	1	· Extension cable	L=5000mm