TD71,TID71

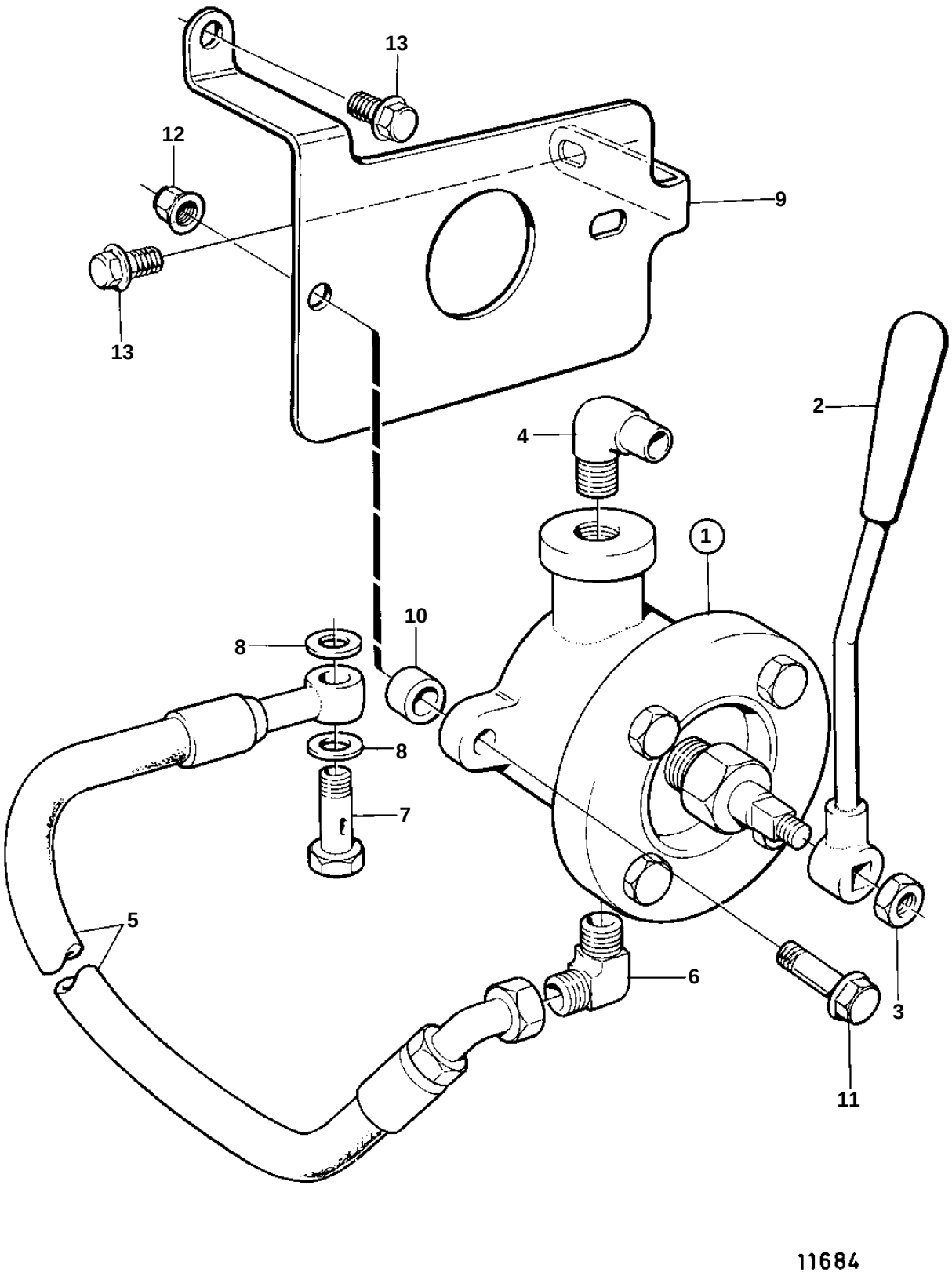

TD71,TID71

REF	PART NO.	QTY	DESCRIPTION		NOTES
1	805999	1	Oil bilge pump		
2	821713	1	Handle		
3	955783	1	Nut		
4	467716	1	Elbow nipple		
5	866370	1	Rubber hose		
6	957111	1	Elbow nipple		
7	191929	1	Hollow screw		
8	957185	2	Gasket		
9	865958	1	Bracket		
10	1576517	2	Sleeve		
11	965185	2	Flange screw		M10x40mm
12	971095	2	Nut		
13	946471	2	Screw		M10x16mm