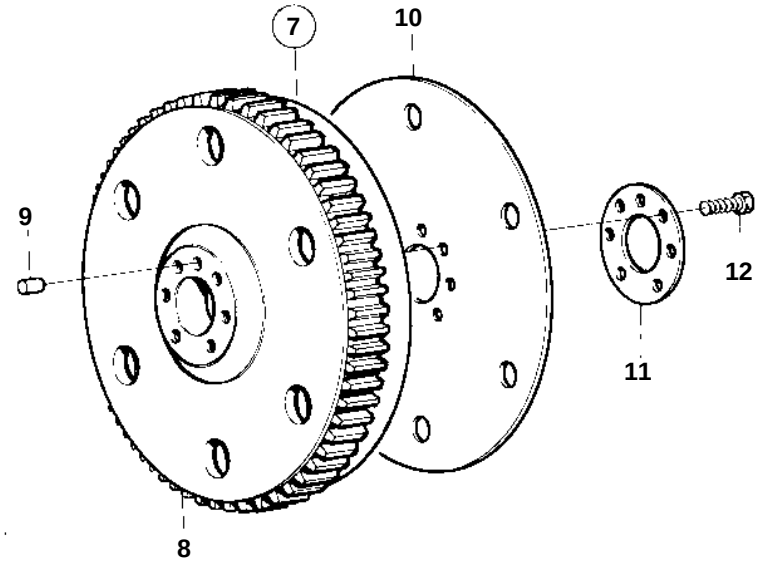
7
10
9
12
11
8

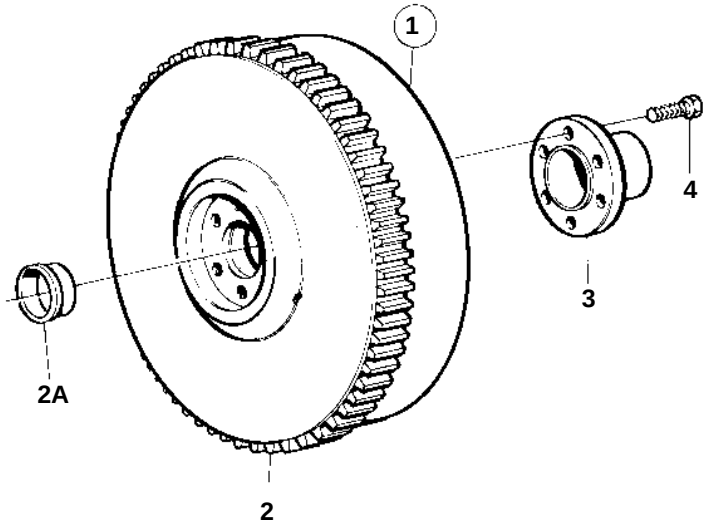
1
4
3
2A
2

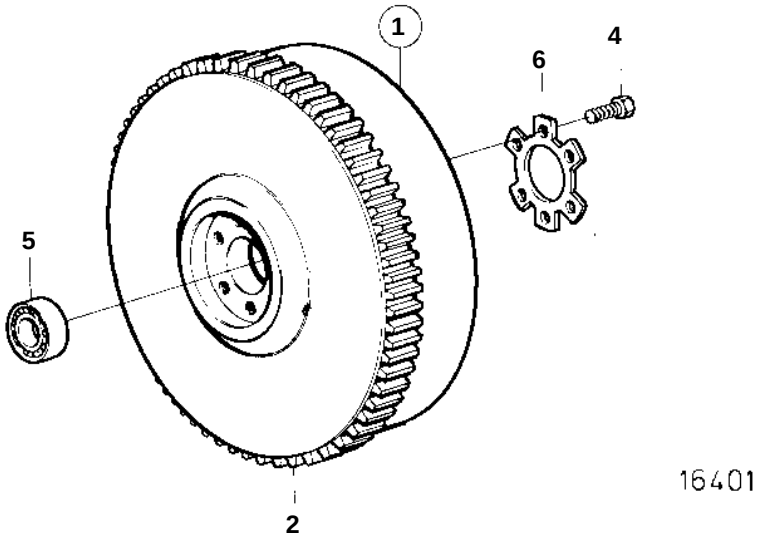
1
4
6
5
2
16401

REF	PART NO.	QTY	DESCRIPTION		NOTES
1	864260	1	Flywheel		FOR FLEXIBLE COUPLING AND FRICTION CLUTCH.
	3825775	1	Flywheel		(3825178)(848486). FORCLARK 28000.
	848484	1	Flywheel		FORALLISON 2000 AND 3000.
2	420314	1	· Gear ring		(420067)
2A	3825182	1	· Bushing		FOR 866742, 3825178,
					3825775
4	465825	6	Screw		L = 39 MM