STOP SOLENOID AND INSTALLATION COMPONENTS: TID60DG

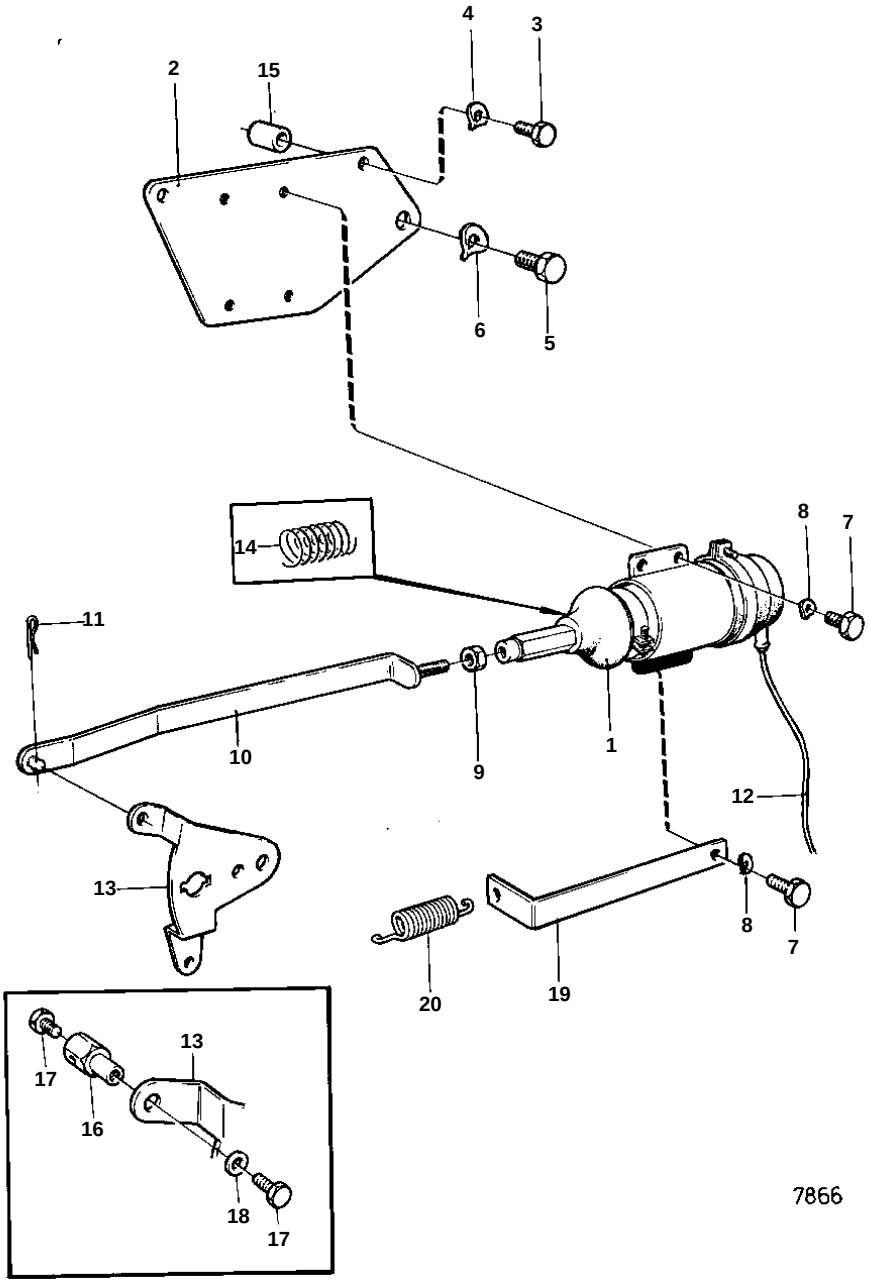

REF	PART NO.	QTY	DESCRIPTION		NOTES
1	881532	1	Stop solenoid		24V
2	842341	1	Bracket		
3	940117	2	Screw		
4	941906	2	Spring washer		
5	955535	1	Screw		
6	942336	1	Spring washer		
7	950045	4	Screw		
8	941906	4	Spring washer		
9	955857	1	Nut		
10	847245	1	Pull rod		STOP SOLENOID ENERGIZED TO RUN
11	907824	1	Cotter pin		
12		X	CABLES AND TERMINALS		SEE GROUP 3
13		1	LEVER		SEE GROUP 2C
14	843401	1	Return spring		
15	829601	1	Spacer sleeve		L = 7 MM
	961170	1	Washer		L = 4 MM
	821539	1	Spacer sleeve		L = 14 MM