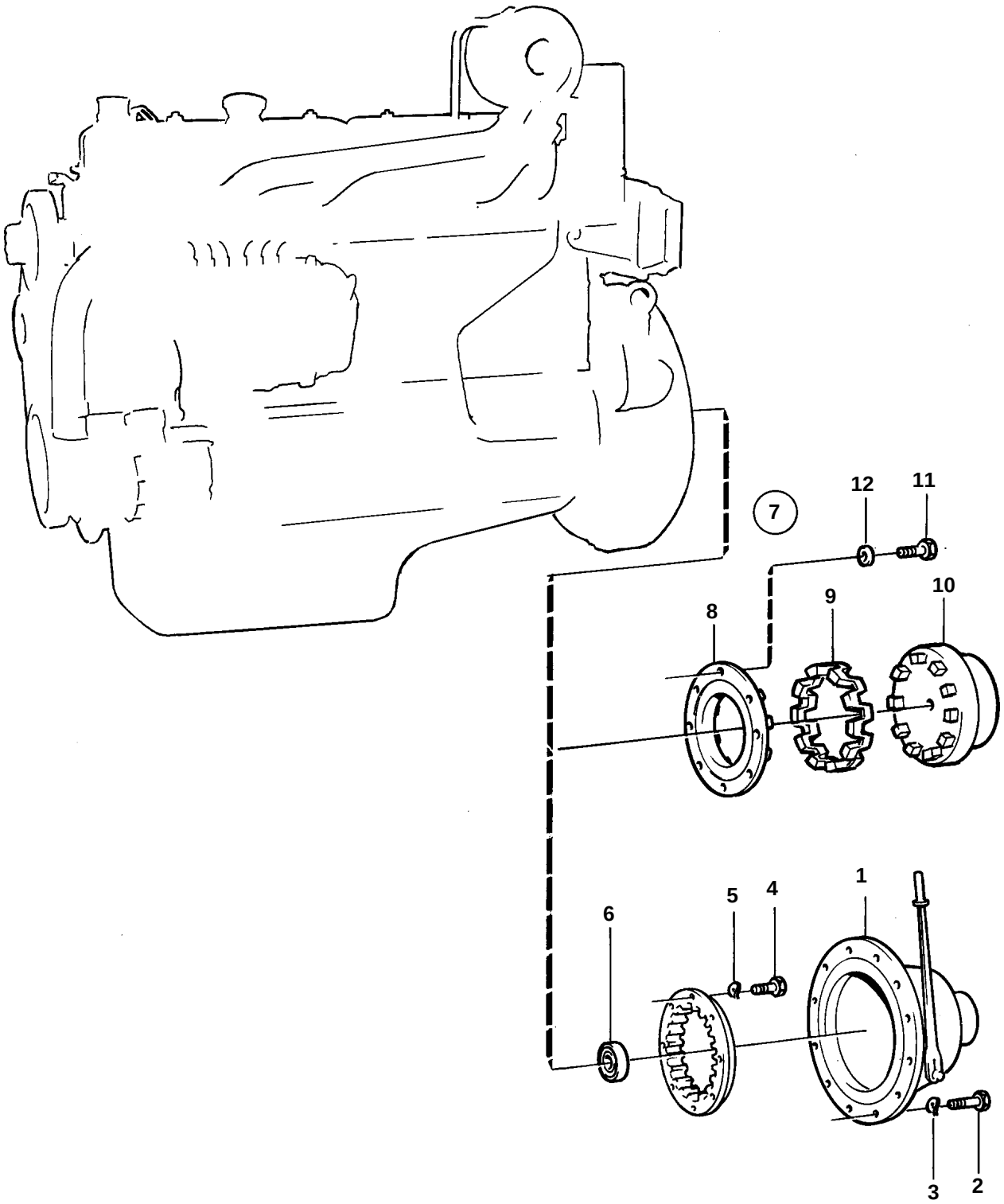

5893

REF	PART NO.	QTY	DESCRIPTION		SEE SEC.	NOTES
1	813694	1	Power take-off			ROCKFORD PTA-21119
					04D-0200	
	842518	1	Clutch			ALT. 111/2" - BORG AND BECK THD SER.62076.
					04D-0225	
2	940115	12	Screw			
3	942336	12	Spring washer			
4	940162	8	Screw			
5	942336	8	Spring washer			
6	847323	1	Ball bearing			