STOP SOLENOID AND INSTALLATION COMPONENTS: TD120C

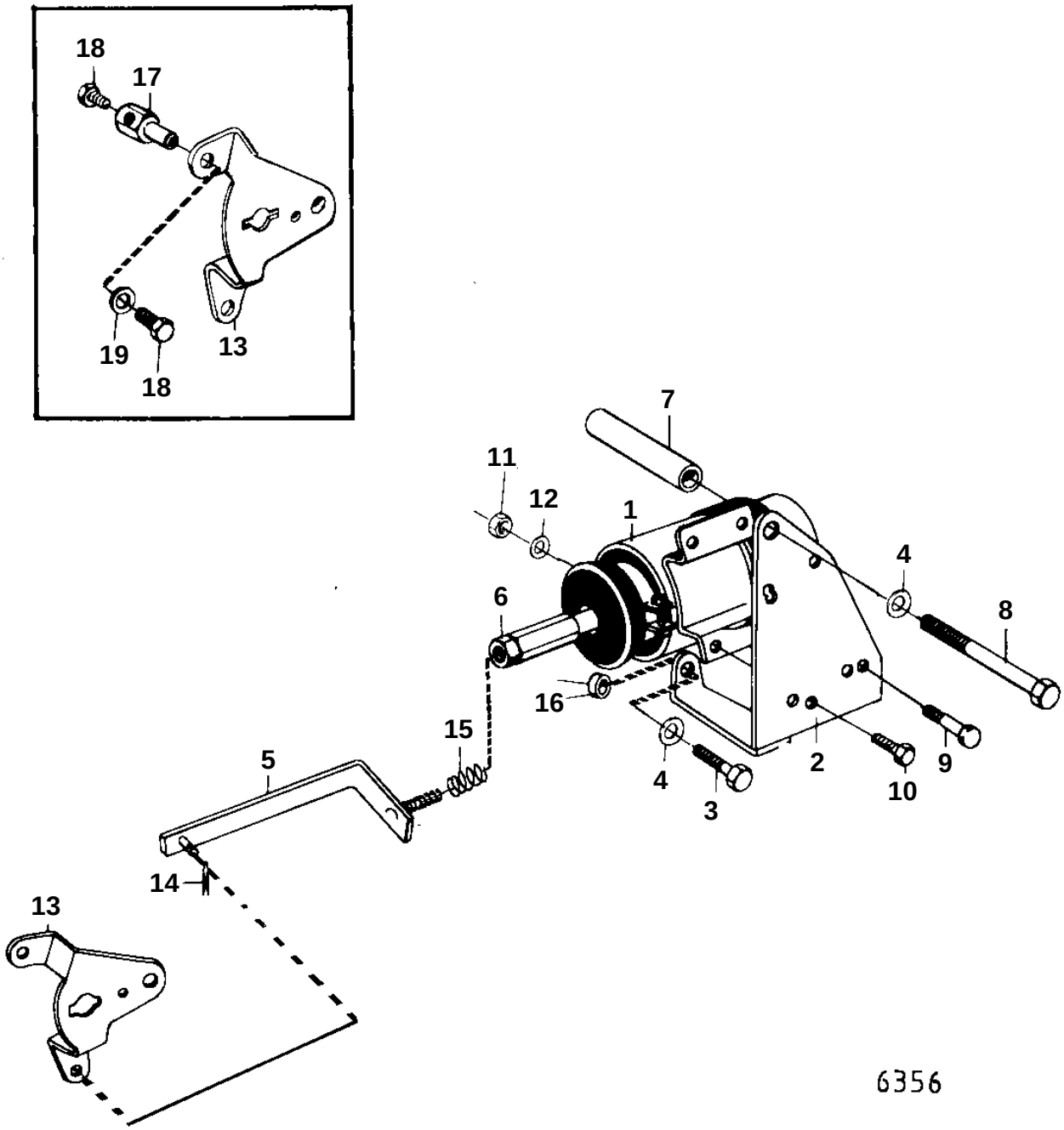

REF	PART NO.	QTY	DESCRIPTION		NOTES
1	881532	1	Stop solenoid		24V LATER PROD
2	822649	1	Bracket		
3	940115	1	Screw		
4	942336	3	Spring washer		
5	845444	1	Pull rod		(822647)
6	955857	1	Nut		
7	822779	1	Spacer sleeve		
8	955541	1	Screw		
9	940100	3	Screw		
10	955513	1	Screw		
11	955825	4	Nut		
12	941906	4	Spring washer		
13	821134	1	Lever		SEE GROUP 2C
14	907824	1	Cotter pin		
15	843401	1	Return spring		LATE TYPE
16	823575	1	Spacer sleeve		
17	804783	1	Cube		SPEC.867492
18	955224	2	Screw		SPEC.867492
19	955891	1	Washer		SPEC.867492