TAD520VE

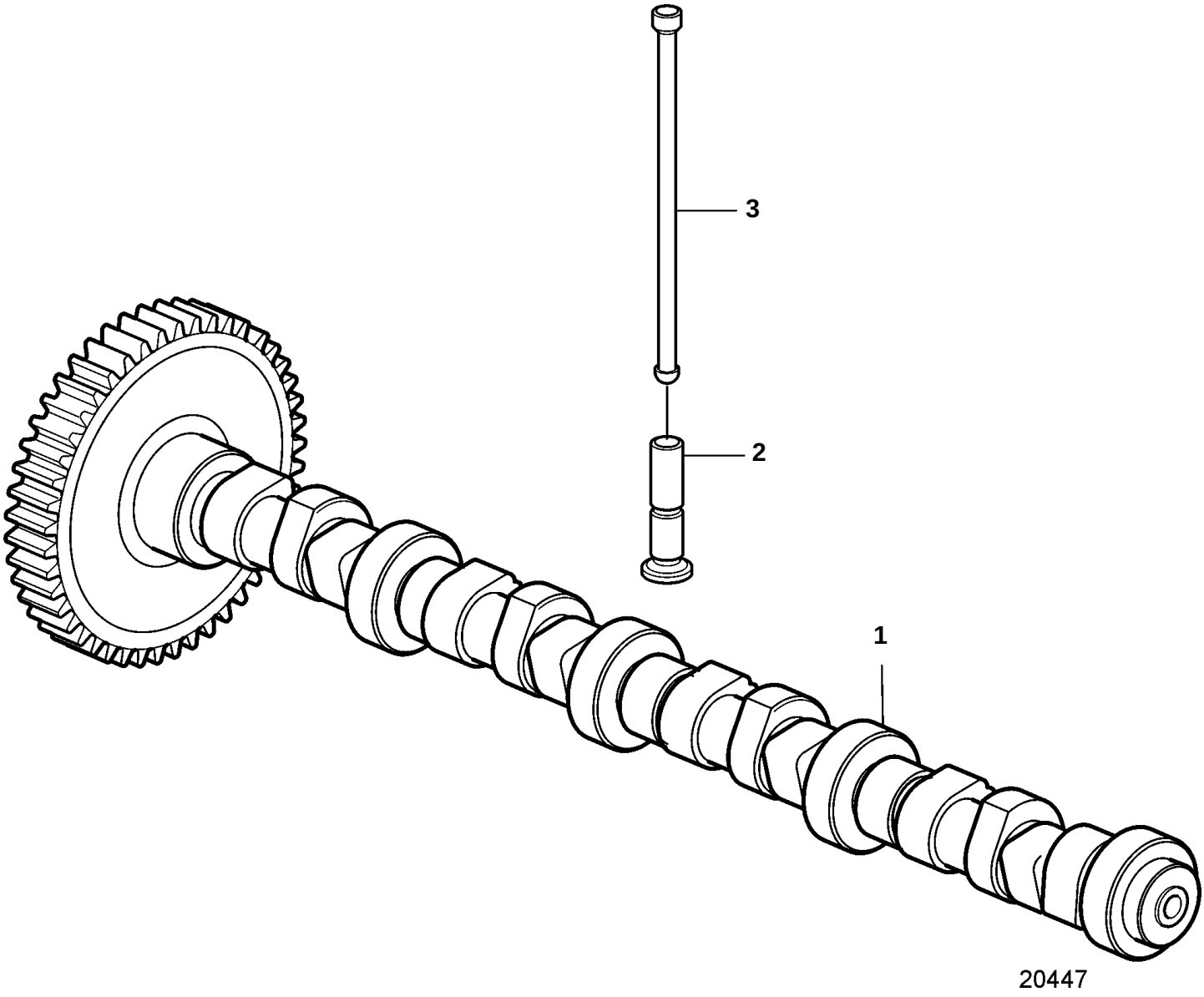

TAD520VE

REF	PART NO.	QTY	DESCRIPTION
1	20550358	1	Camshaft
2	11700366	8	Lifter
3	20405534	8	Push rod