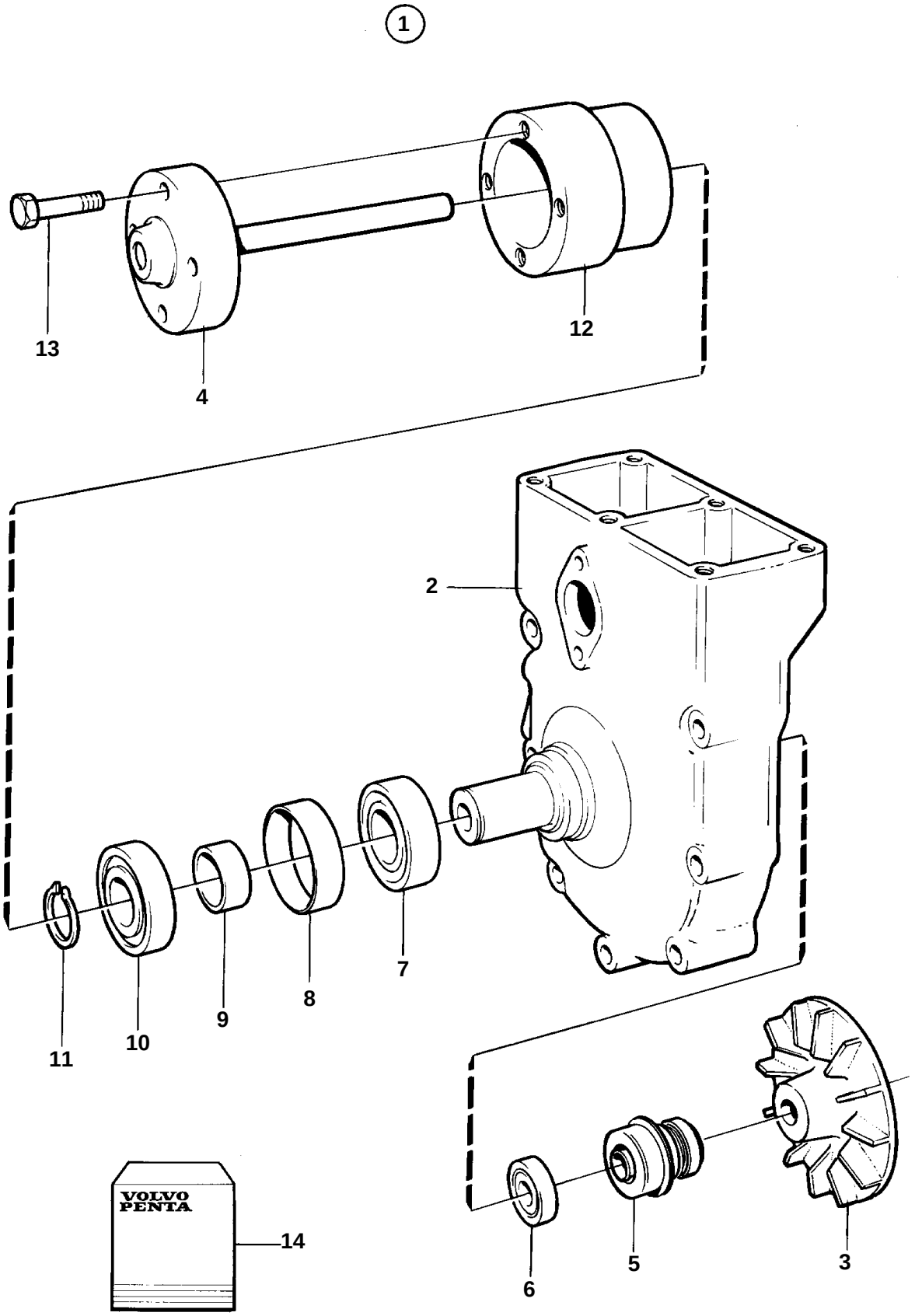
1
13
4
12
2
11
10
9
8
7
VOLVO PENTA
14
6
5
3
15405

REF	PART NO.	QTY	DESCRIPTION	NOTES
1	866583	1	Circulation pump	
	3803208	1	Circ. pump, exch, exch	
2		1	· Disc	
3	1698603	1	· Impeller	
4	844369	1	· Shaft	
5	1676432	1	· Sealing ring	
6	1660609	1	· Ball bearing	
7	181538	1	· Ball bearing	
8	422202	1	· Spacer sleeve	
9	1542871	1	· Spacer sleeve	
10	1542870	1	· Ball bearing	
11	914462	1	· Lock ring	
12	843597	1	· Hub	
13	955525	2	· Screw	
14	875661	1	Repair kit	SEE GROUP 99