# AIR FILTER AND INSTALLATION COMPONENTS: TD30A

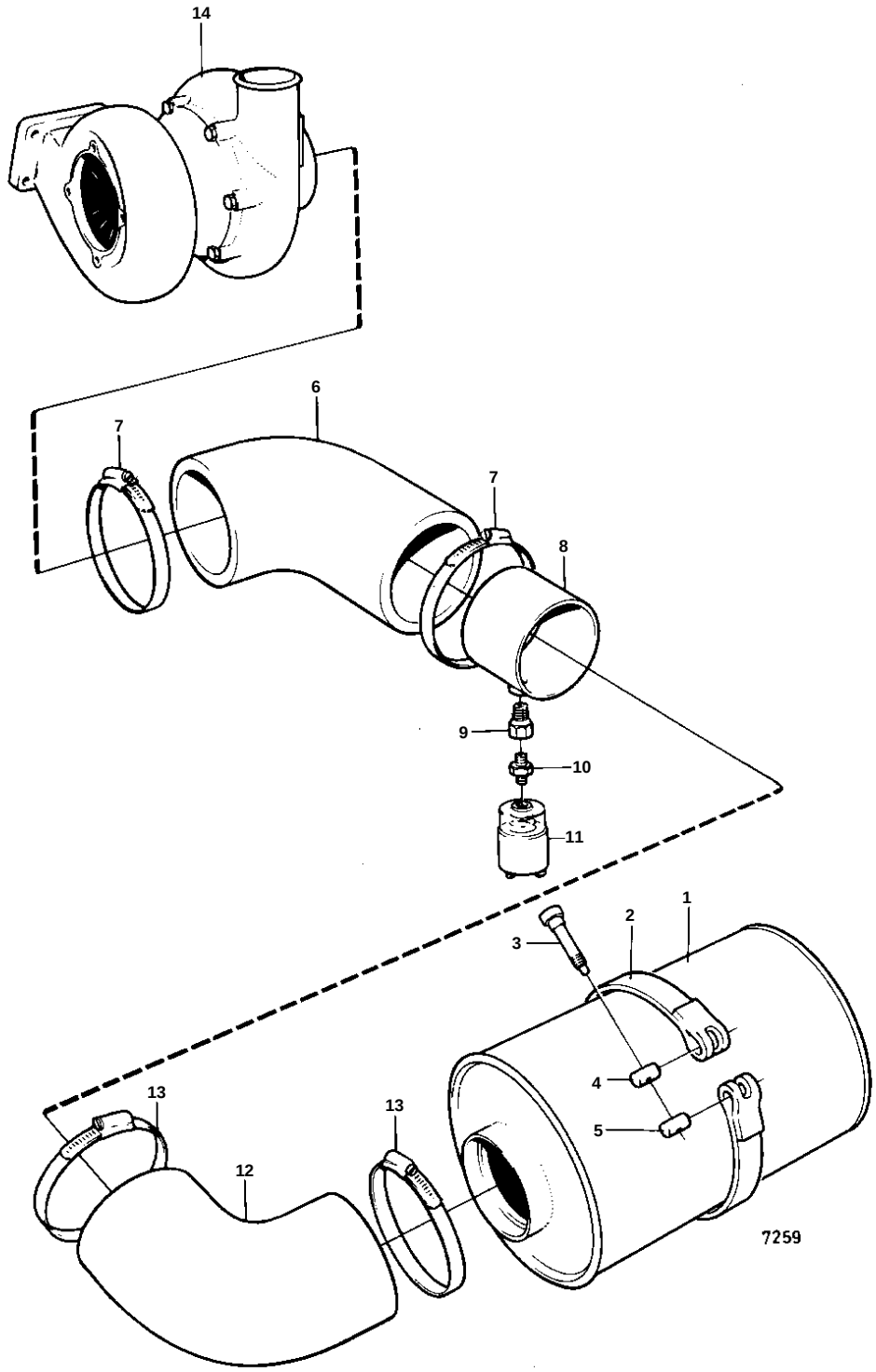

| REF | PART NO. | QTY | DESCRIPTION | | SEE SEC. |
|---|---|---|---|---|---|
| 1 | 842280 | 1 | Air filter | | |
| 2 | 821028 | 2 | Tensioning band | | |
| 3 | 31406 | 2 | Screw | | |
| 4 | 31404 | 2 | Pin | | |
| 5 | 31405 | 2 | Pin | | |
| 6 | 6873008 | 1 | Rubber hook | | |
| 7 | | 2 | CLAMP | | |
| 8 | | 1 | CONNECTION PIPE | | |
| 9 | 823953 | 1 | Nipple | | |
| 10 | 191095 | 1 | Nipple | | |
| 11 | 842037 | 1 | Vacuum gauge | | |
| 12 | 824359 | 1 | Rubber hook | | |
| 13 | | 2 | CLAMP | | |
| 14 | | 1 | TURBOCHARGER | | 02B-0550 |