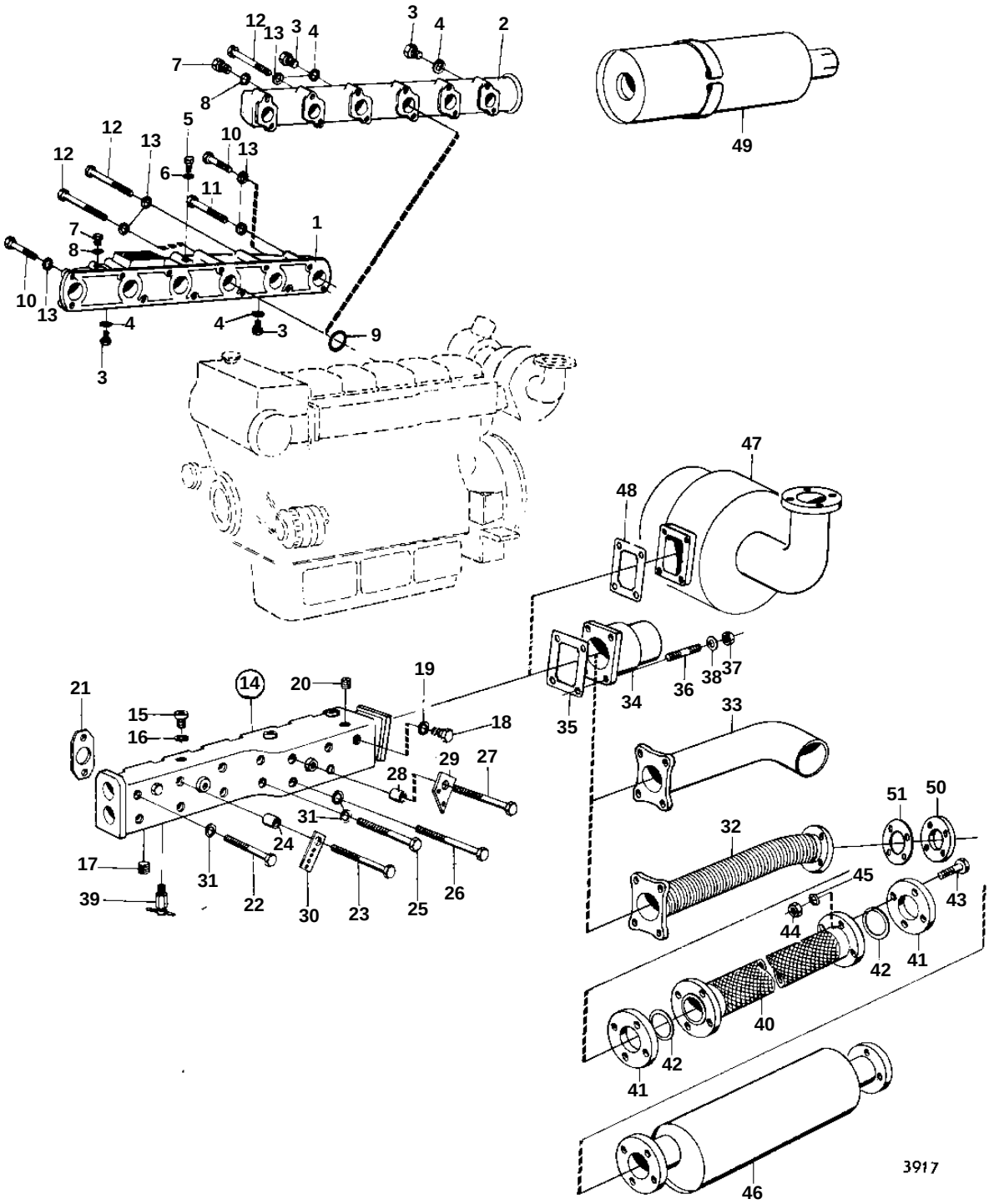
12
13
3
4
3
4
2
7
8
49
12
13
5
10
13
12
6
11
1
7
8
10
13
4
4
3
9
3
47
48
21
14
20
19
15
16
18
35
34
36
38
37
33
29
27
28
31
24
51
50
32
17
31
22
30
23
25
26
45
43
39
44
42
41
40
42
41
46
3917

REF	PART NO.	QTY	DESCRIPTION		SEE SEC.	NOTES
2	424010	1	Inlet pipe			MO-65138/XXXXX
	837560	1	Inlet pipe			MO 65139/XXXXX-
3	180707	2	Plug			TD120GG WITH STARTER ELEMENT IN CONNECTING PIPE 468257
4	957173	2	Gasket	IK		TD120GG WITH STARTER ELEMENT IN CONNECTING PIPE 468257
7	16318	1	Plug			
8	907132	1	Gasket	IK		
9	422174	6	Rubber ring	IK		
12	955529	8	Screw			L = 76 MM
13	955894	12	Washer			
14	896700	1	Exhaust pipe			
15	467367	8	· Plug			
16	469328	8	· Gasket	IK		
17	952075	5	· Plug			
18	180726	2	· Plug			
19	907137	2	· Gasket			
20	952079	1	· Plug			
21	422074	6	Gasket	IK		
22	942547	5	Screw			
23	191652	1	Screw			
24	912130	1	Spacer ring			
25	959798	2	Screw			
26	102030	3	Screw			
27	942124	1	Screw			
28	912129	1	Spacer ring			
29	820756	1	Attaching plate			
30	820755	1	Attaching plate			
31	940097	10	Washer			
39	82745	2	Tap			
40	820900	1	Exhaust hose			
46		1	MUFFLER		02B-0850	
47		1	TURBO		02B-1250	
			INSTALLATION COMPONENTS			
48	417382	1	Gasket		02B-1250	
49		1	AIR FILTER		02B-1250	