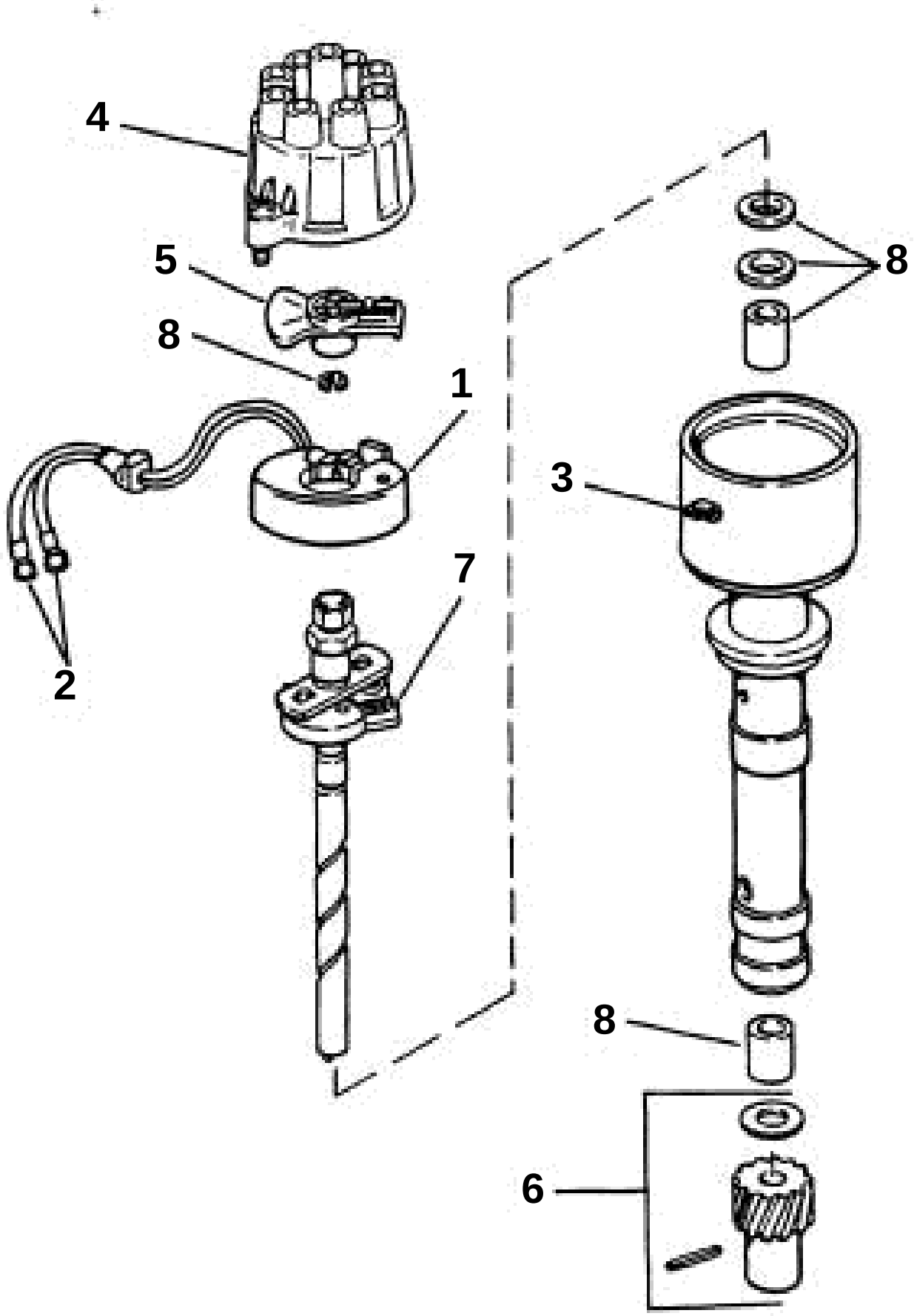
4
5
8
1
2
7
3
8
8
6

DISTRIBUTOR - 5.7 GL

REF	PART NO.	QTY	DESCRIPTION
	3854043	1	Distributor
1	3854077	1	· Sender, Module
2	3854035	1	· · Cylinder, Coil
3	3853812	1	· Bracket
4	3853815	1	· Cover, Distributor
5	3853801	1	· Rotor
6	3853888	1	· Gear set, Collar & parts pkg
7	3853858	1	· Spring kit
8	3853795	1	· Bearing, ABS, Bronze