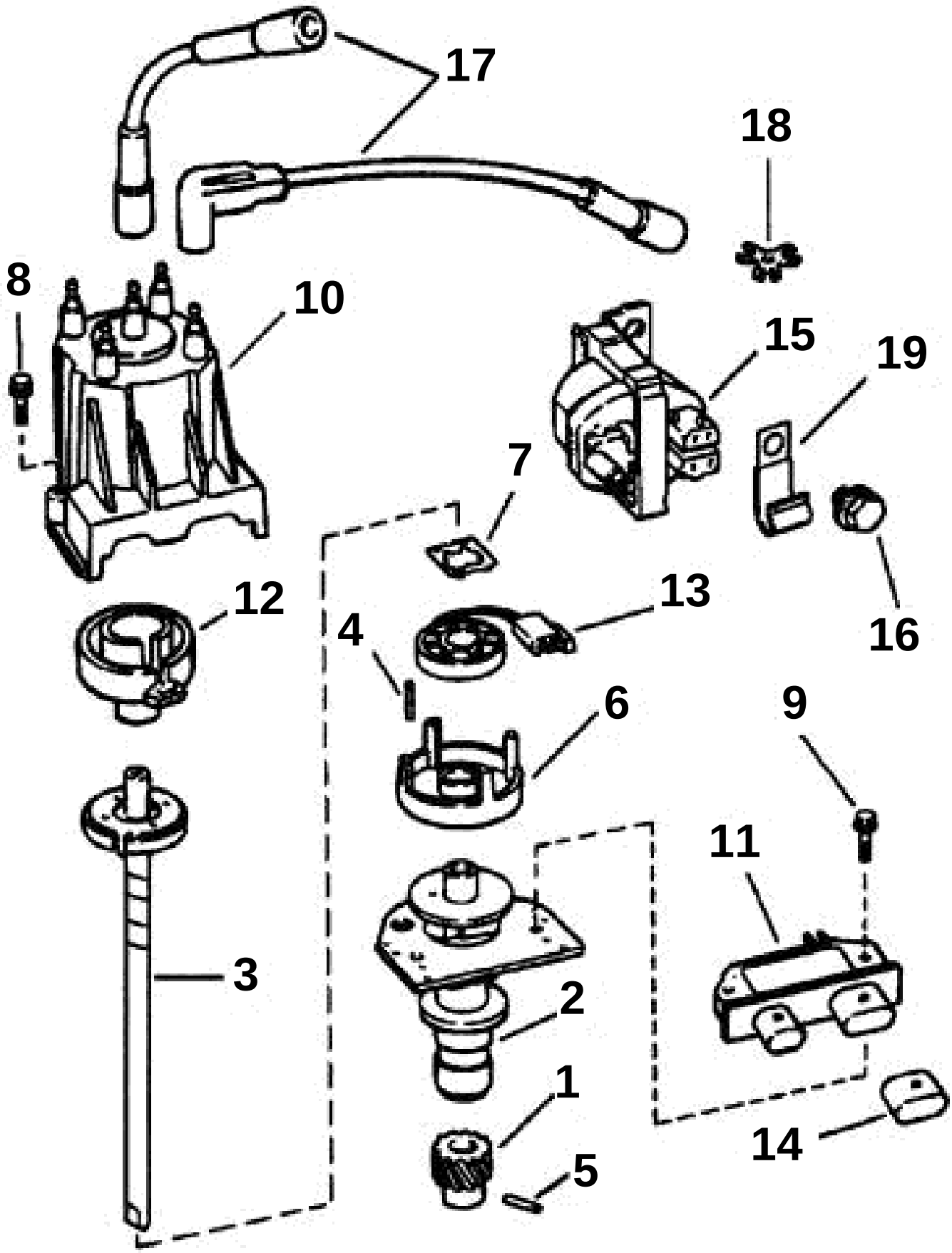
17
18
8
10
15
19
7
12
13
4
16
6
9
11
3
2
1
14
5

DISTRIBUTOR & IGNITION COIL

REF	PART NO.	QTY	DESCRIPTION
1	3854263	1	Gear
2	3854264	1	Housing
3	3854265	1	Shaft
4	3853316	1	Locating pin, Locating
5	3854266	1	Connector pin, Gear attachment
6	3854267	1	Pole shoe
7	3853317	1	Retainer
8	3853318	2	Screw, Distributor cap
9	3853319	2	Screw, Module
10	3854260	1	Distributor cap
11	3854003	1	Module
12	3854261	1	Rotor
13	3854001	1	Coil
14	3850645	1	Cap
15	3854922	1	Ignition coil
16	3857448	2	Screw
17	3851815	1	Ignition cable kit
18	3852492	2	· Retainer, 3 wire ignition leads
19	3852092	1	Clamp, Engine cable