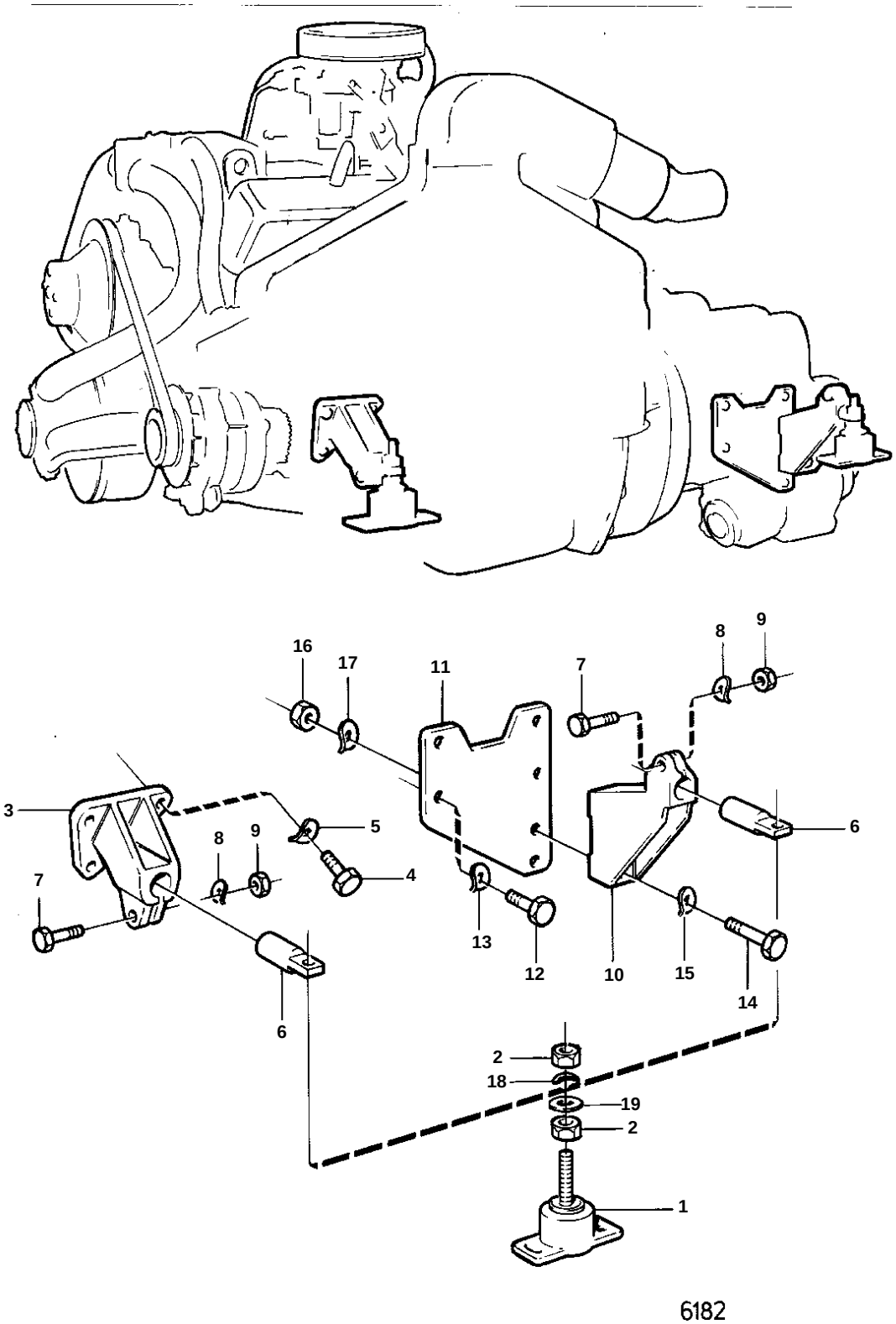
16
17
11
7
8
9
3
5
6
8
9
4
7
13
12
10
15
14
6
2
18
19
2
1
6182

REF	PART NO.	QTY	DESCRIPTION		NOTES
1	841355	4	Rubber cushion		
2	955839	8	· Nut		
3	841316	2	Engine mountings		
4	941939	6	Screw		
5	942336	6	Spring washer		
6	841247	4	Pin		
7	955550	2	Screw		L = 51 MM
	955551	2	Screw		L = 57 MM
8	941909	4	Spring washer		
9	950355	4	Nut		
10	841317	2	Engine mountings		
14	955550	4	Screw		
15	941909	2	Spring washer		
18	941914	4	Spring washer		
19	955902	4	Washer		