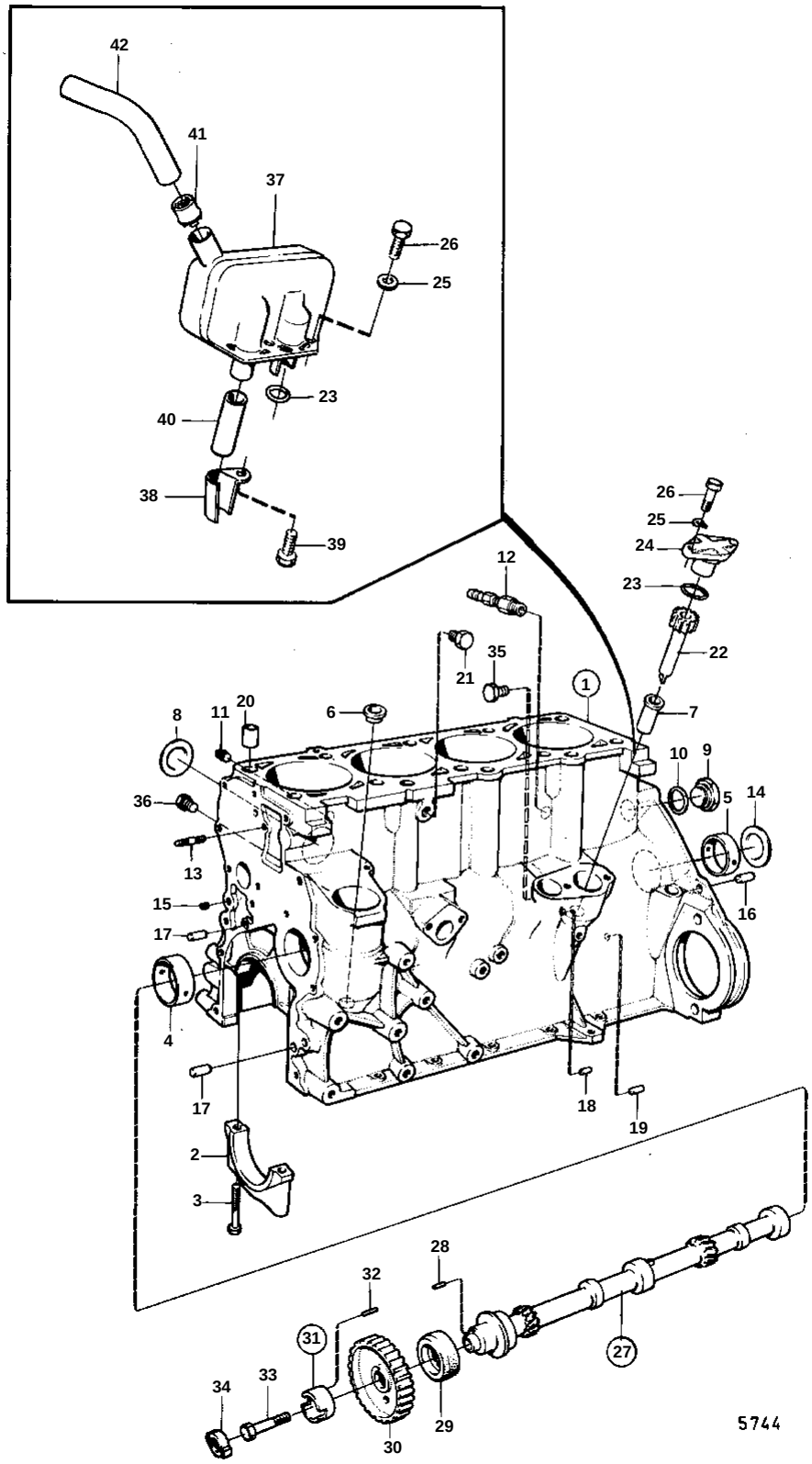
42
41
37
26
25
23
40
38
39
26
25
24
23
22
12
21
35
1
7
8
11
20
6
10
9
5
14
36
13
15
17
16
4
17
18
19
2
3
28
32
31
27
34
33
29
30
5744

REF	PART NO.	QTY	DESCRIPTION		SEE SEC.	NOTES
1	1306358	1				REPLACED BY 1EA 1306356 + 1EA 841817 COVER + 1EA 841818 GASKET.
2		5	· BEARING CAP			
3	945799	10	· Screw			
4	463360	1	· Bushing			
5	463361	2	· Bushing			
6	463363	1	· Bushing			AQ140A MO-7019/XXXX. AQ120B MO-602/XXXX.
7	463362	1	· Bushing			
8	463904	4	· Expansion plug			
9	960636	1	· Plug			AQ140A MO-7019/XXXX. AQ120B MO-602/XXXX.
10	946282	1	· Gasket	IK		AQ140A MO-7019/XXXX. AQ120B MO-602/XXXX.
11	952076	1	Plug			
12	947894	1	Drain cock			
13	924055	2	Stud			
14	463905	1	Expansion plug			
15	952075	3	Plug			
16	19730	2	Locating pin			
17	950565	1	Pin			L = 22 MM
	950562	1	Pin			L = 16 MM
18	950586	1	Pin			
19	950542	1	Pin			
20	415311	2	Sleeve			
21	952075	1	Plug			
22	463365	1	Shaft		02A-1250	
23	925065	1	O-ring	IK		
24	463367	1	Cover			
25	941907	2	Spring washer			
26	955295	2	Screw			SEE GROUP 2B
27	463581	1	Countershaft			
28	949433	1	· Pin			
29	1306333	1	Sealing ring, SEAL RING	IK		(463358)
					02A-0900	
30	831972	1	Wheel		02A-0900	
31	828038	1	Companion flange			
32	950525	1	· Lock pin			
33	955322	1	Screw			
34	831009	1	Cross piece			SEE GROUP 2B
35	960630	1	Plug			