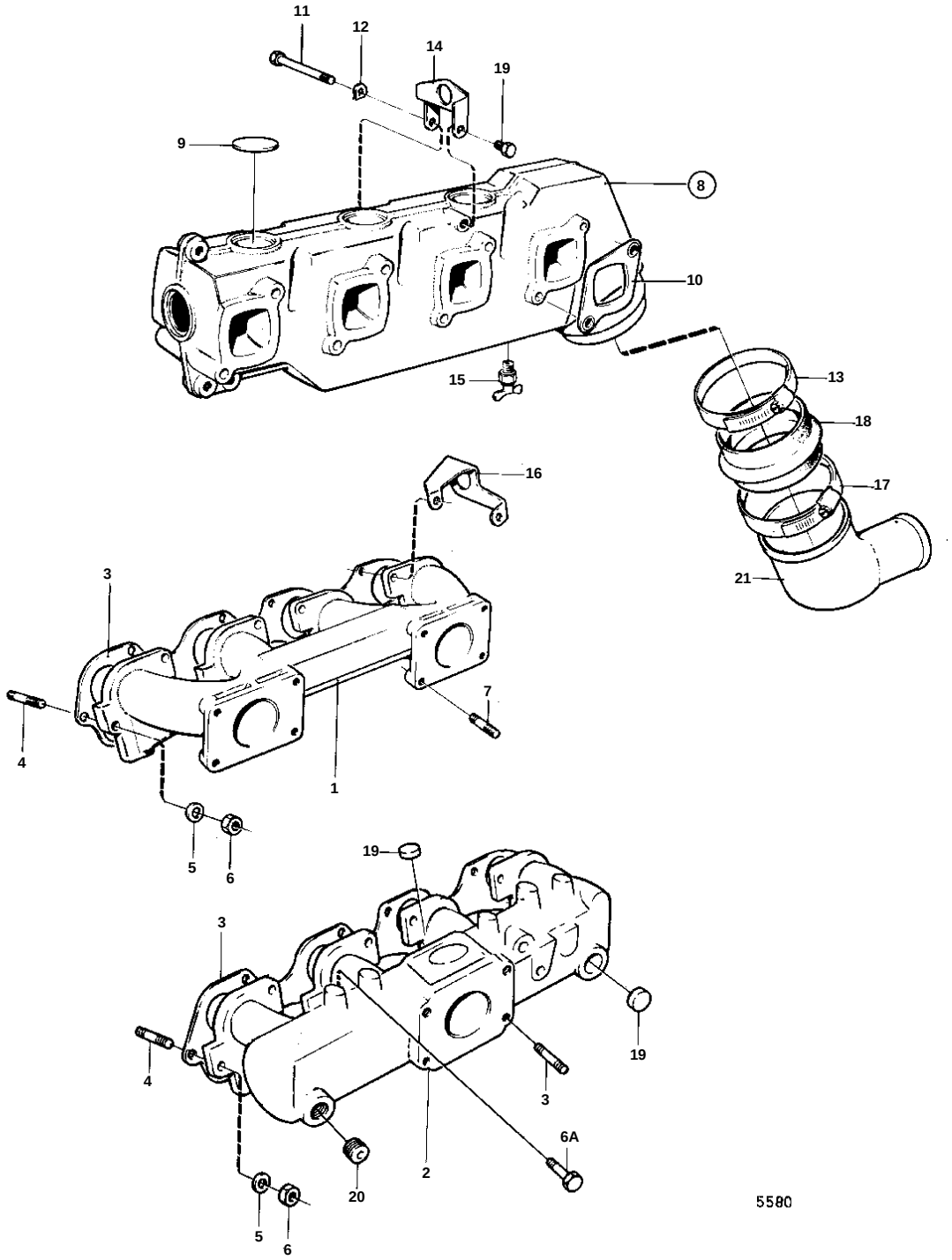
11
12
14
19
9
8
10
15
13
18
16
17
21
3
7
4
1
5
6
19
3
19
4
3
6A
2
20
5
6
5580

REF	PART NO.	QTY	DESCRIPTION		NOTES
2	841531	1	Inlet pipe		
3	1266796	1	Gasket	IK	AQ120B EXCL USA MO904/XXXX-. USA MO1706/XXXX-.
4	953046	6	Stud		SEE GROUP 2A
5	955894	6	Washer		
6	955782	6	Nut		
6A	965216	2	Screw		
7	953043	4	Stud		SEE GROUP 2C
8	855387	1	Exhaust pipe		(834438)
9	941256	8	・ Plug		
10	855383	4	Gasket	IK	
11	955310	7	Screw		L = 130 MM
	955308	1	Screw		L = 110 MM
12	941907	8	Spring washer		
13	955293	1	Screw		
14		1	LIFT EYE		
15	82745	1	Tap		
16		1	LIFT EYE		
17	943483	2	Hose clamp		SEE GROUP 4A
18	834871	1	Exhaust hose		SEE GROUP 4A (942713)