5.0GXiC-P

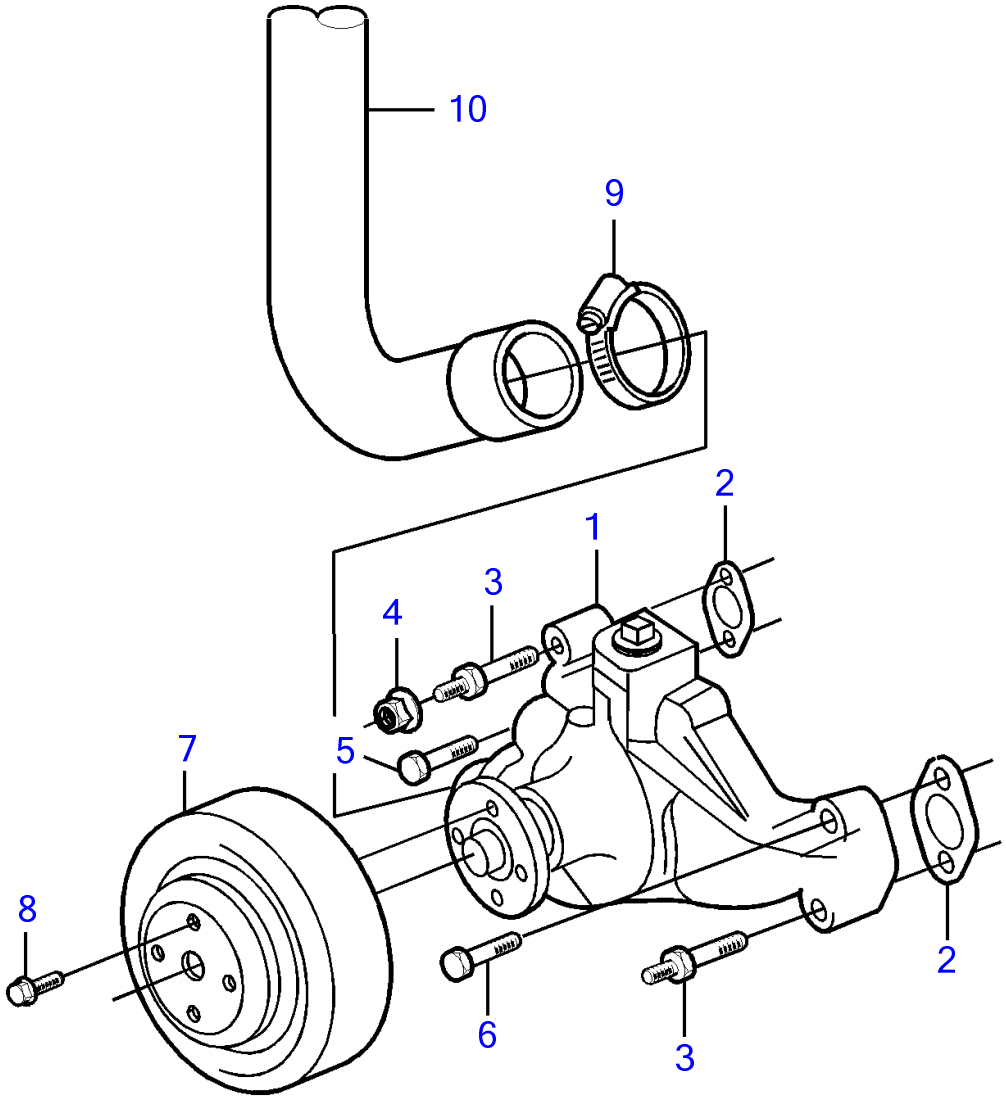

25401

5.0GXiC-P

REF	PART NO.	QTY	DESCRIPTION	NOTES
1	3853850	1	Circulation pump	
2	3852477	2	Gasket	
3	3856147	2	Stud	
4	3853403	1	Nut retainer	
5	(3856137)	1	Bolt	Obsolete part
6	3856136	1	Bolt	
7	3860083	1	Pulley	
8	3863054	4	Flange screw	
9	3863438	1	Hose clamp	
10		1	Hose	Thermostat housing or heat exchanger