4.3GXiE-225-R

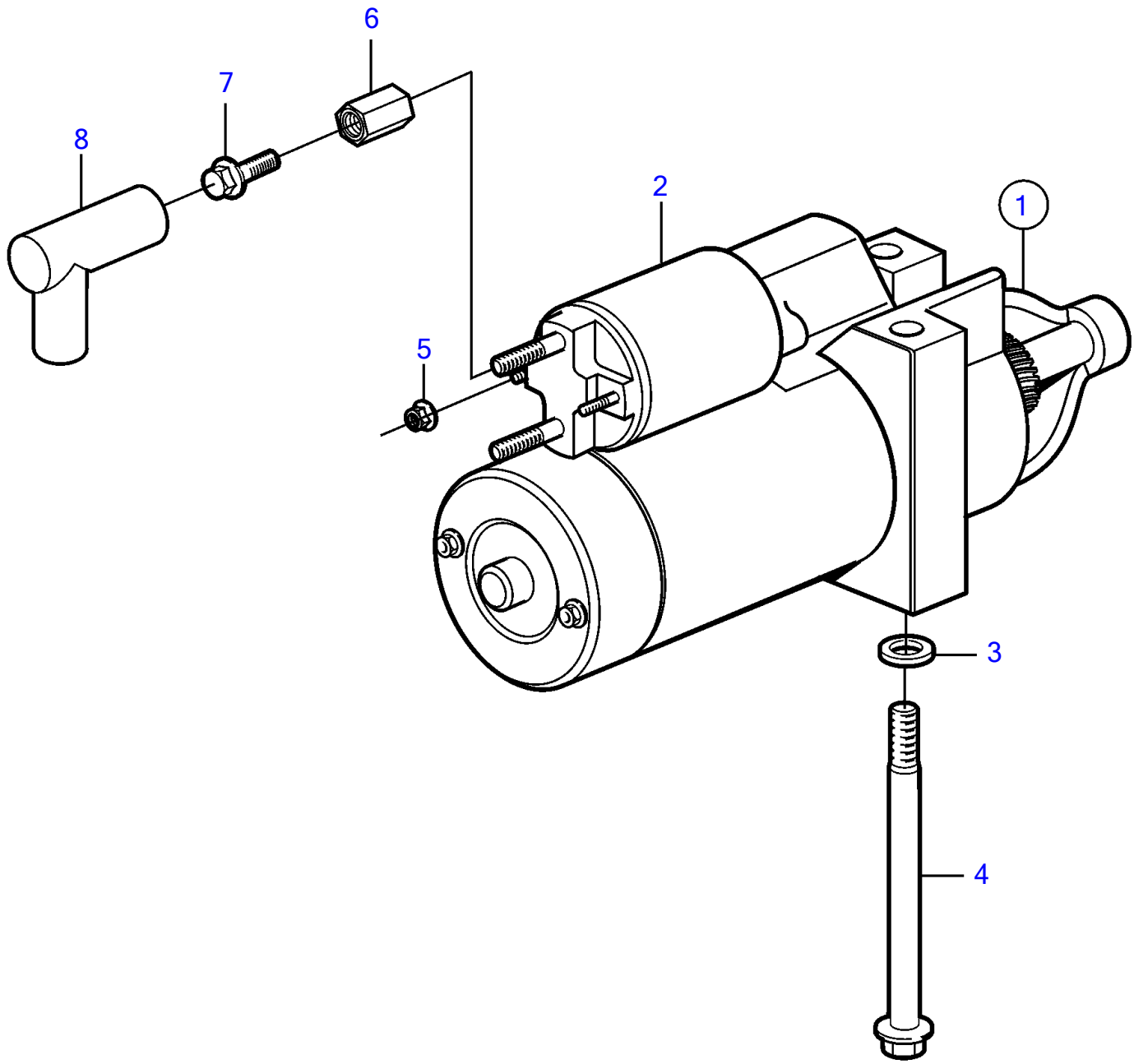

20931

4.3GXiE-225-R

REF	PART NO.	QTY	DESCRIPTION
1	3885317	1	Starter motor
2	3810300	1	▪ Solenoid kit
3	3854496	2	Washer
4	3857936	2	Screw
5	949874	2	Flange lock nut
6	855314	1	Spacer nut
7	947107	1	Flange screw
8	855798	1	Protecting sleeve