250A,250B

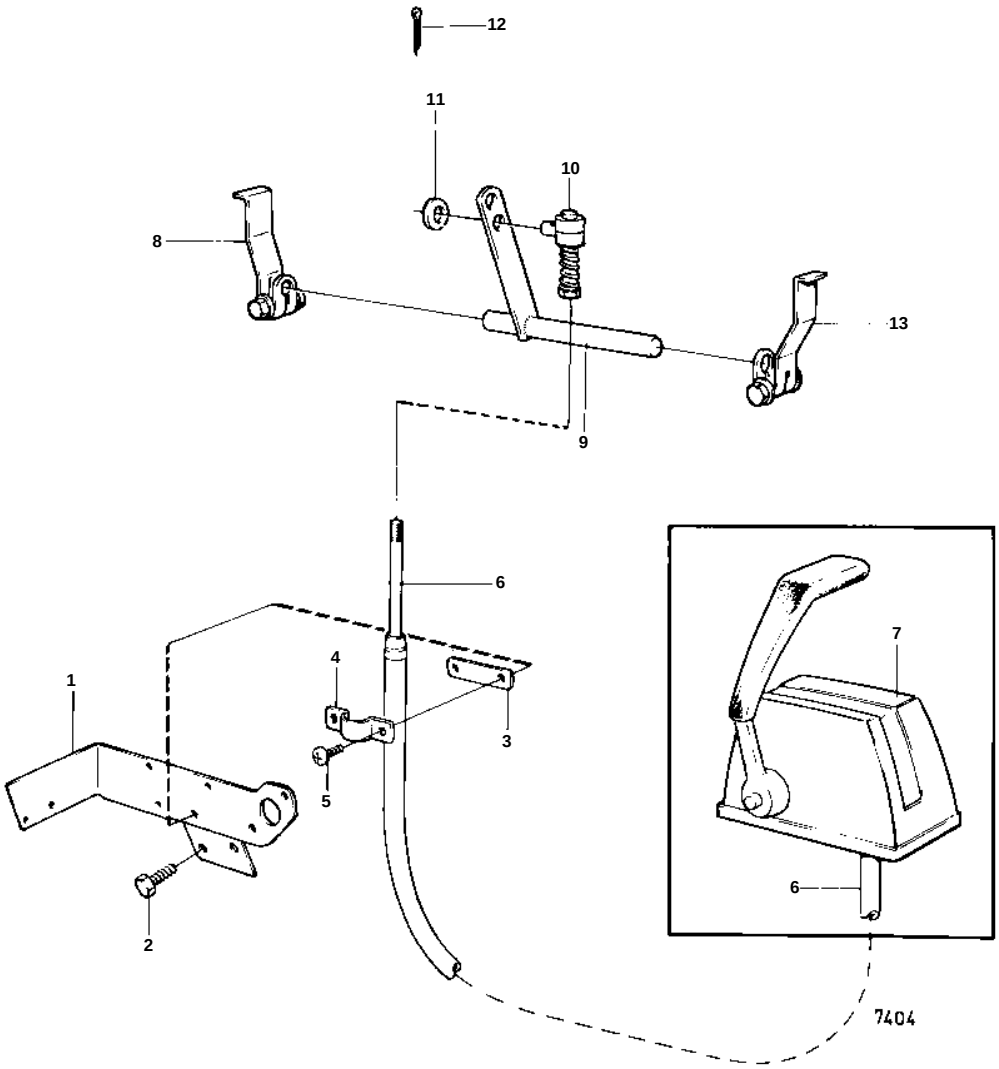

250A,250B

REF	PART NO.	QTY	DESCRIPTION		NOTES
1	855268	1	Bracket		
2	966378	2	Flange screw		
3	819068	1	Washer		
4	819067	1	Brace		
5	946753	2	Screw		
6		X	CONTROL CABLE		SEE GROUP 9
7		X	CONTROL		SEE GROUP 9
8	668558	1	Lever		
9	831210	1	Shaft		
10	841275	1	Cube		
11	940191	1	Washer		
12	17276	1	Cotter pin		
13	668559	1	Lever		