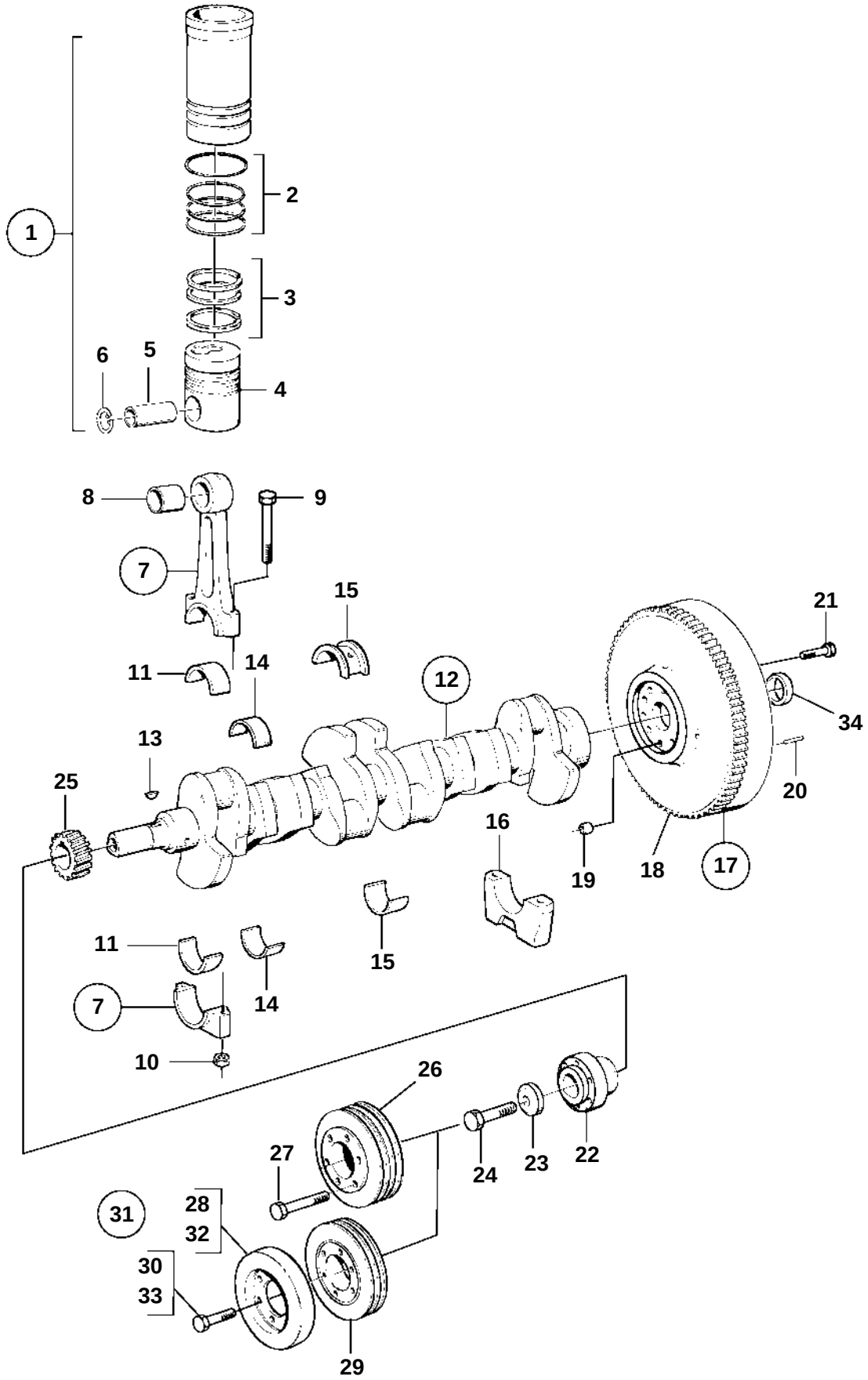
1
2
3
4
5
6
7
8
9
10
11
12
13
14
15
16
17
18
19
20
21
22
23
24
25
26
27
28
29
30
31
32
33
34
19469

REF	PART NO.	QTY	DESCRIPTION		NOTES
1	3817034	6	Cylinder liner kit		(3581714)
2	275751	6	· Sealing ring kit		
3	3817033	6	· Piston ring kit		
4		6	· Piston		
5	422793	6	· Piston pin		
6	914519	12	· Lock ring		
7	3581063	6	Connecting rod		(860381)
8	3581021	6	· Bushing		
9	1542077	12	· Screw		
10	1542078	12	· Nut		
11	876511	6	Big end bearing kit		STD D
	876512	6	Big end bearing kit		U.S=0,25mm
	876513	6	Big end bearing kit		U.S=0,50mm
	876514	6	Big end bearing kit		U.S=0,75mm
12	3582850	1	Crankshaft		
13	910118	1	· Woodruff key		
14	876515	6	Main bearing kit		STD D
	876516	6	Main bearing kit		U.S=0,25mm
	876517	6	Main bearing kit		U.S=0,50mm
	876518	6	Main bearing kit		U.S=0,75mm
15	876519	1	Thrust bearing		STD D
	876520	1	Thrust bearing		O.S=0,10mm/U.S=0,25mm
	876521	1	Thrust bearing		O.S=0,20mm/U.S=0,50mm
	876522	1	Thrust bearing		O.S=0,20mm/U.S=0,75mm
16		7	Main bearing cap		
17	3582705	1	Flywheel		HS1A, (861163)
18	829462	1	· Gear ring		
19	415311	1	· Sleeve		
20	191873	3	· Locating pin		
21	861671	1	Screw kit		The kit includes 8 ea screw.. Shall not be used together with bolt plate 1542093.
22	1542196	1	Hub		
23	420124	1	Washer		
24	470366	1	Screw		
25	1542305	1	Gear		
26	877409	1	Damper kit		
27	948217	6	Flange screw		