TMD100C

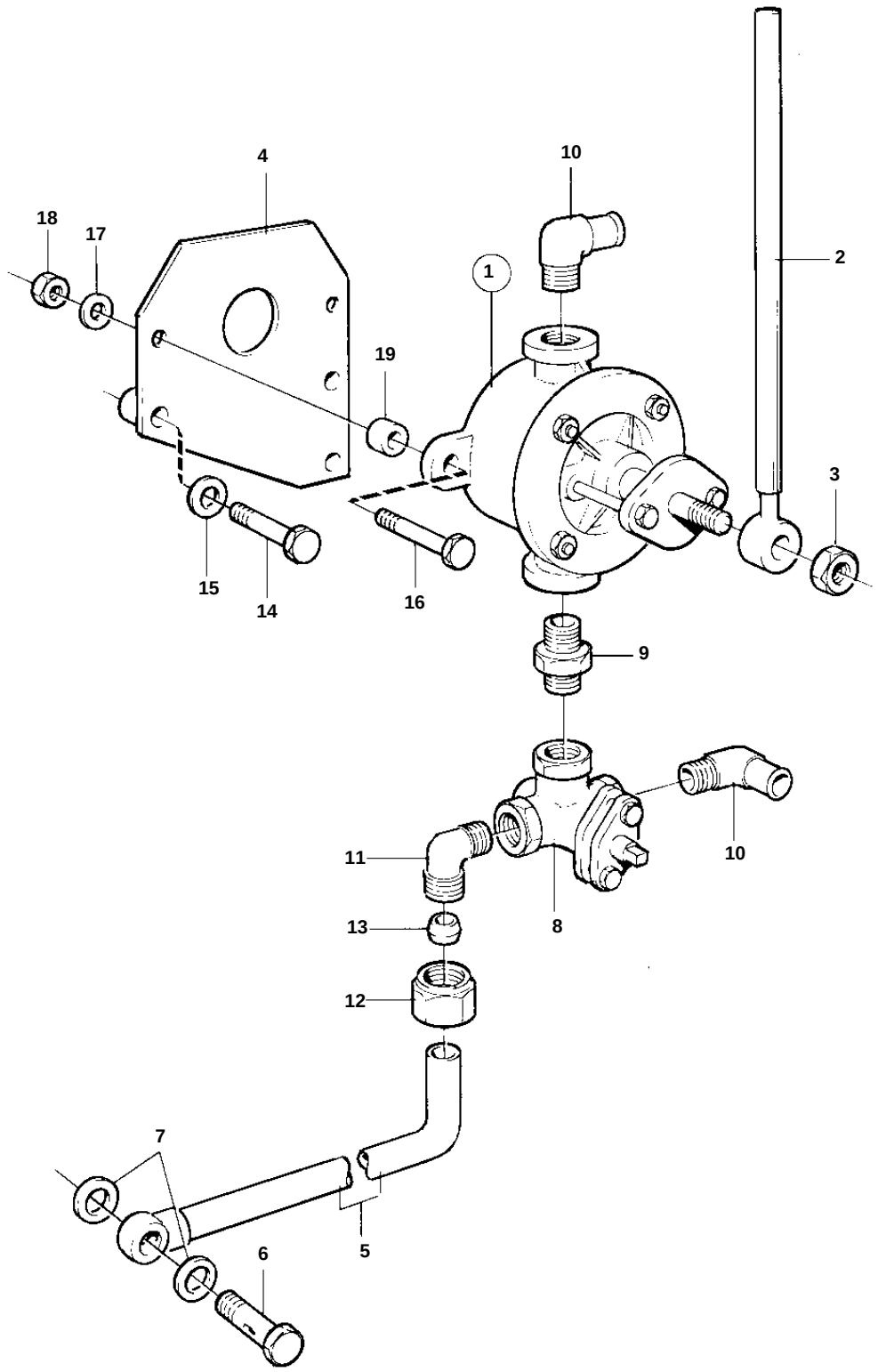

TMD100C

REF	PART NO.	QTY	DESCRIPTION	
1	805999	1	Oil bilge pump	
2	821713	1	· Handle	
3	955783	1	· Nut	
4	846174	1	Bracket	
5	820892	1	Tube	
6	26013	1	Hollow screw	
7	947624	2	Gasket	IK
8	807721	1	Tap	
9	16452	1	Nipple	
10	961610	2	Hose nipple	
11	941758	1	Elbow union	
12	941752	1	Nut	
13	941753	1	Ferrule	
14	940161	1	Screw	
15	941907	1	Spring washer	
16	940162	2	Screw	
17	942336	2	Spring washer	
18	955827	2	Nut	
19	823575	2	Spacer sleeve	