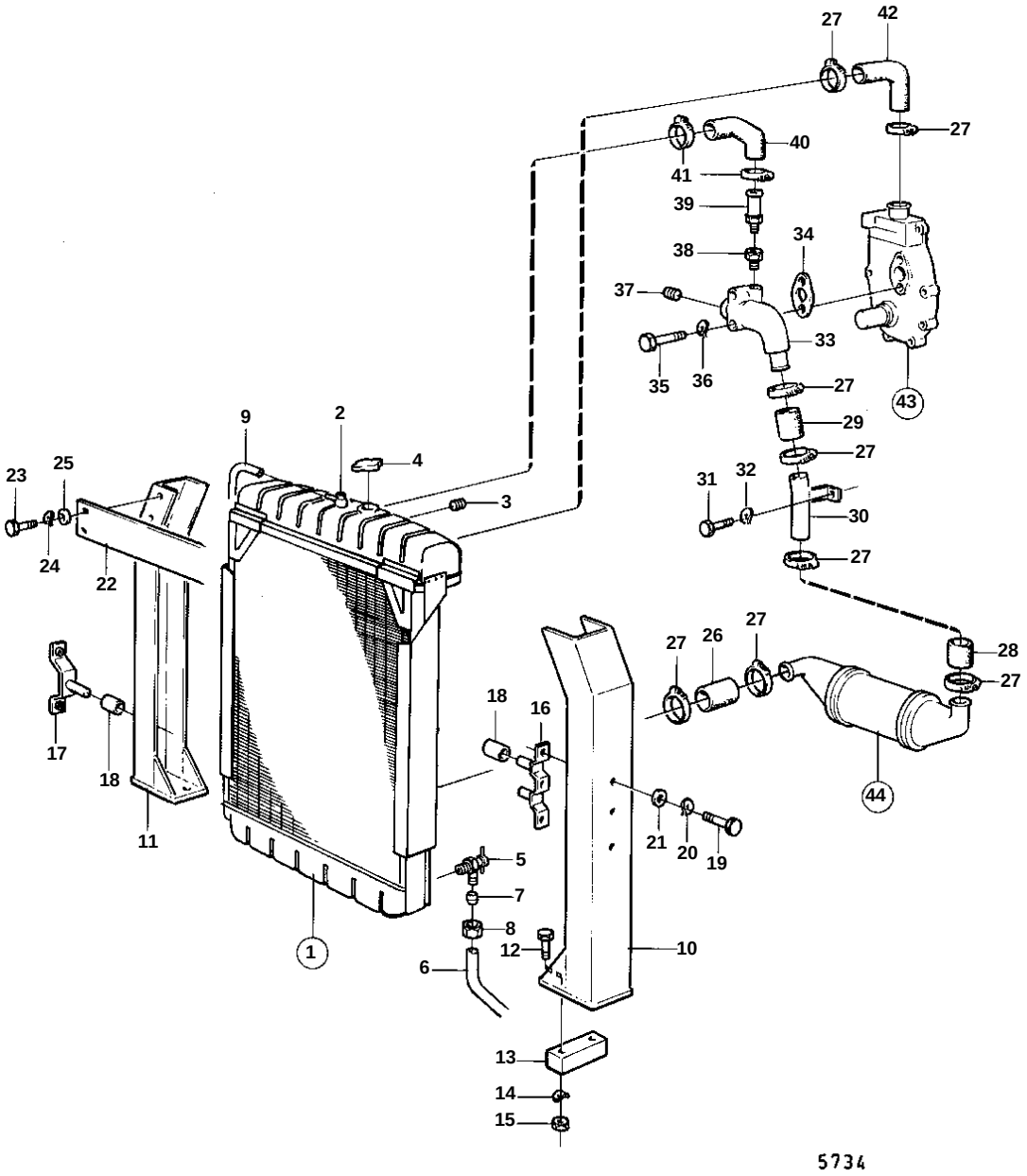
27
42
27
40
41
39
38
34
37
33
35
36
27
43
29
27
9
2
4
23
25
3
31
32
30
24
22
27
27
26
27
28
27
18
16
17
18
44
11
21
20
19
5
7
8
12
10
1
6
13
14
15
5734

REF	PART NO.	QTY	DESCRIPTION		SEE SEC.	NOTES
1	821160	1	Radiator			
2	342099	1	· Reducing valve			
3	952075	1	Plug			
4	344753	1	Radiator cap			
5	820436	1	Drain cock			
6	954305	X	Copper tube			ALT L = 250 MM
7	954365	1	Fitting			ALT
8	954357	1	Cap nut			ALT
9	192618	X	Hose			L = 1400 MM
10	820780	1	Bracket			LEFT
11	820778	1	Bracket			RIGHT
12	940115	8	Screw			STD L = 25 MM
	955537	8	Screw			FOR 844505
13	844505	4	Spacer plate			
14	942336	8	Spring washer			
15	955827	8	Nut			
16	341909	1	Attaching plate			LEFT
17	341907	2	Attaching plate			RIGHT
18	823381	4	Rubber cushion			
19	940135	7	Screw			
20	941907	7	Spring washer			
21	899990	7	Washer			
22	821052	1	Bracket			
23	955523	4	Screw			
24	941907	4	Spring washer			
25	955894	4	Washer			
26	821684	1	Hose			
27	943480	6	Clamp			
28	952980	X	Rubber hose			L = 130 MM
29	952980	X	Rubber hose			L = 130 MM
30	820639	1	Tube		02B-0625	
31	955536	1	Screw			ALT
32	942336	1	Spring washer			ALT
33	423137	1	Riser		02B-1375	
34	423138	1	Gasket	IK		
35	955540	1	Screw			L = 70 MM
	955537	1	Screw			L = 51 MM
36	942336	2	Spring washer			
37	952077	2	Plug			
38	180265	1	Extension			
39	941845	1	Nipple			
40	342309	1	Rubber hose			
41	943475	2	Hose clamp			
42	845872	1	Radiator hose			
43			WATER PUMP		02B-1375	
44			OIL COOLER FRONT END MOUNTED		02B-0625	