TAMD72P-A

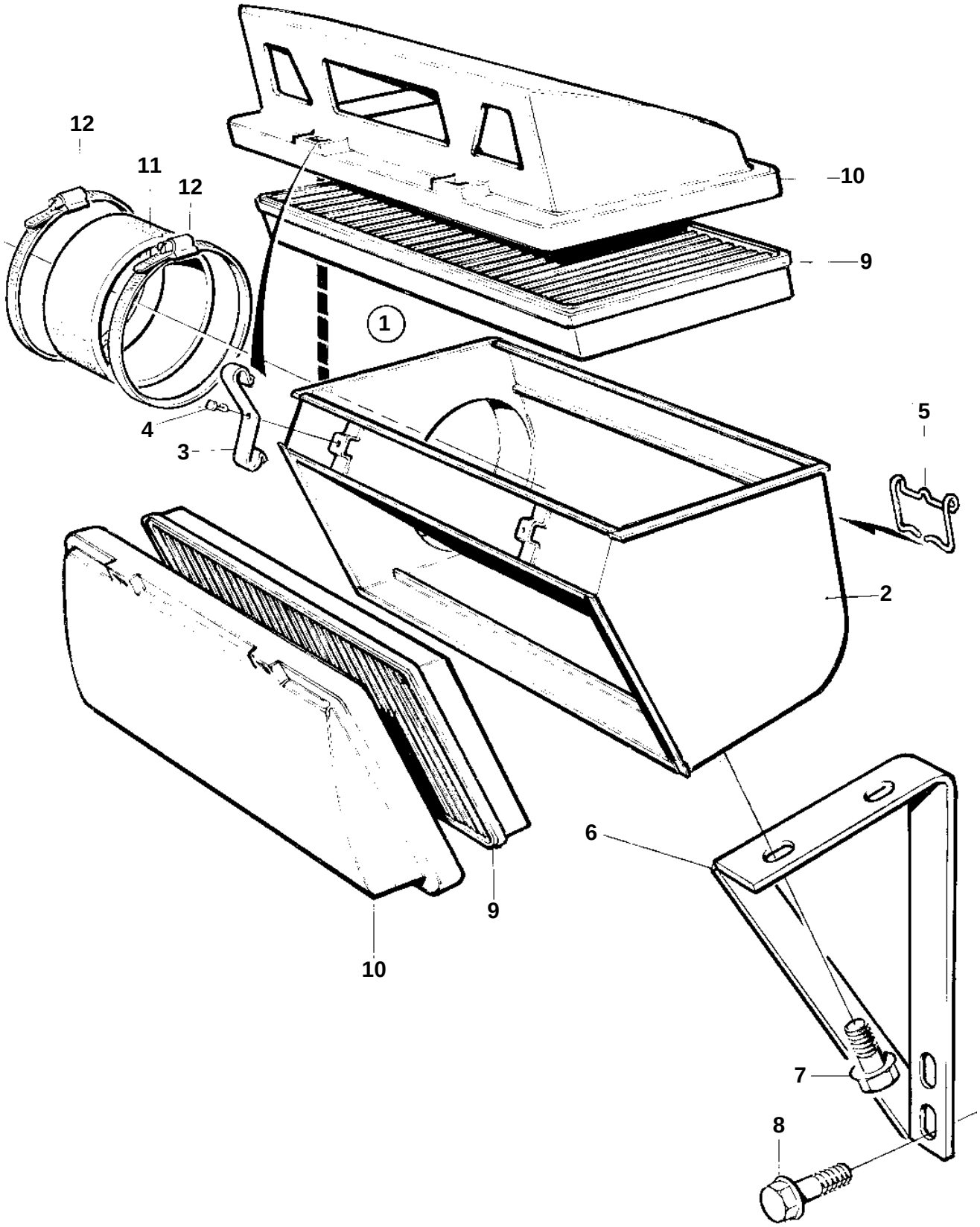

16103

TAMD72P-A

REF	PART NO.	QTY	DESCRIPTION		NOTES
1	876299	1	Filter housing		
2	865357	1	· Filter housing		
3	848620	6	· Clamp		
4	1308917	2	· Rivet		
5	673792	4	· Lock		
6	3825688	1	Bracket		
7	946440	2	Flange screw		L=16mm
8	945444	2	Flange screw		L=25mm
9	876185	2	Insert		
10	842615	2	Cover		
11	3825689	1	Rubber collar		
12	943484	2	Hose clamp		