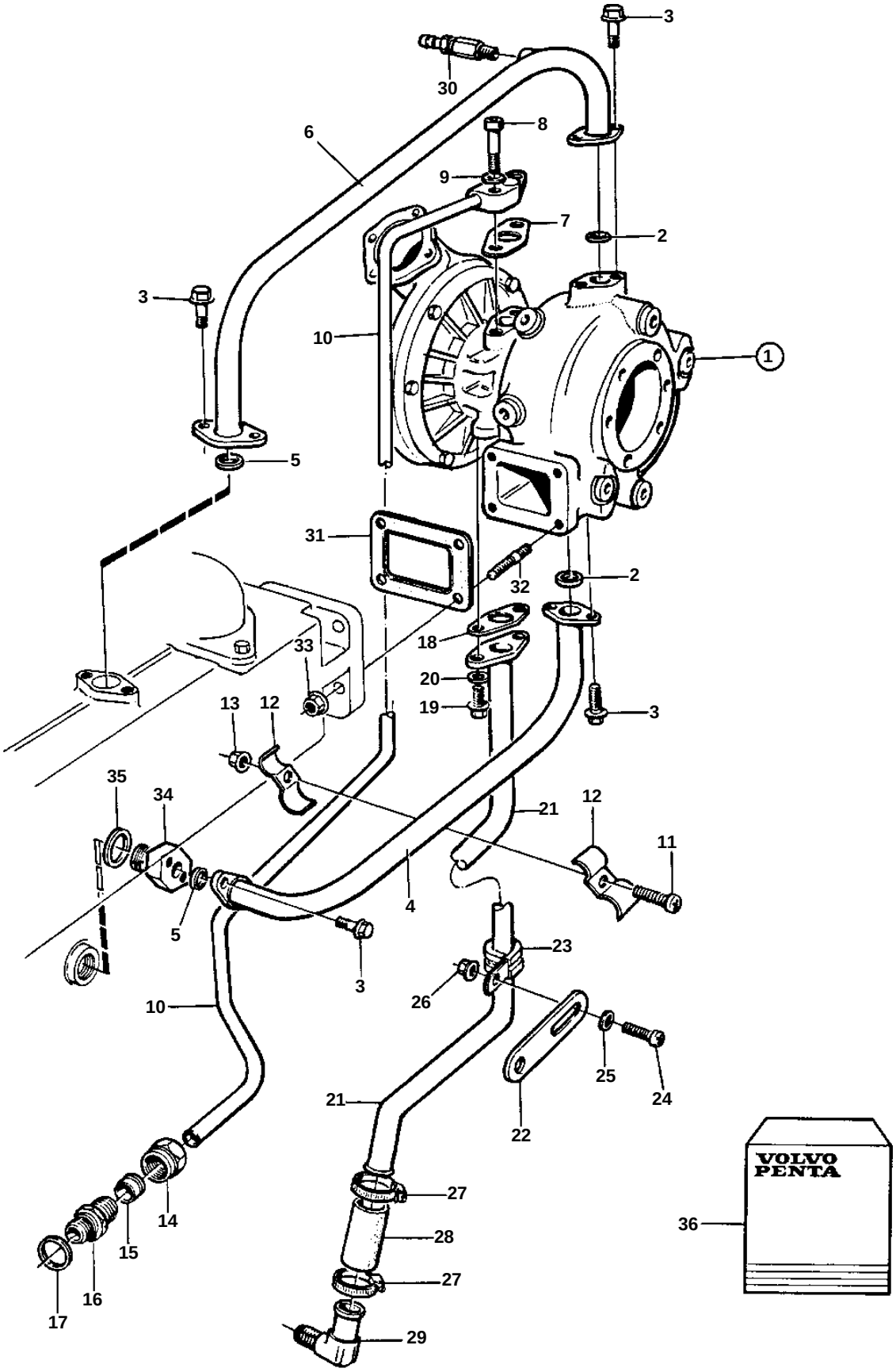
3
30
8
6
9
7
2
3
10
1
5
31
32
2
18
33
20
19
3
13
12
35
34
21
12
11
4
5
23
3
26
10
25
24
21
22
27
14
28
15
27
16
17
29
36
VOLVO PENTA
15743

REF	PART NO.	QTY	DESCRIPTION		SEE SEC.	NOTES
1	3826985	1	Turbo			E.U=3802080
	3802080	1	Turbocharger, exch			Exchange unit
					4690	
2	862637	2	Gasket			
3	946440	8	Flange screw			
4	849202	1	Tube			
5	842913	2	Sealing ring			
6	849203	1	Tube			
7	420641	1	Gasket			
8	959238	1	Screw			L=25mm
	959239	1	Screw			L=30mm
9	955895	2	Washer			
10	849204	1	Oil feed pipe			
11	956095	2	Screw			
12	820851	4	Clamp			
13	945407	2	Flange nut			
14	941331	1	Nut			
15	980782	1	Ferrule			(1677898)
16	941330	1	Nipple, oil-filter housing			
17	947624	1	Gasket, oil-filter housing			
18	1543360	1	Gasket			
19	970947	2	Screw			
20	941908	2	Spring washer			
21	849205	1	Oil return pipe			
22	965540	1	Bracket			
23	952631	1	Clamp			
24	956095	1	Screw			
25	955892	1	Washer			
26	945407	1	Flange nut			
27	943473	2	Hose clamp			
28	466328	1	Rubber hose			
29	479959	1	Elbow nipple, cylinder block			
30	949918	1	Drain cock			
31	470939	1	Gasket			
32	479972	4	Stud			
33	471622	4	Nut			
34		1	Nipple			SEE GROUP 21
35		1	Gasket			SEE GROUP 21
36	876804	1	Gasket kit			For mounting of the connecting pipe for the charge air cooler, bring also 3pcs sealing rings 3825197 and 1pc sealing ring 863016.