Expansion Tank for Heat Exchanger: B

TAMD165A-A

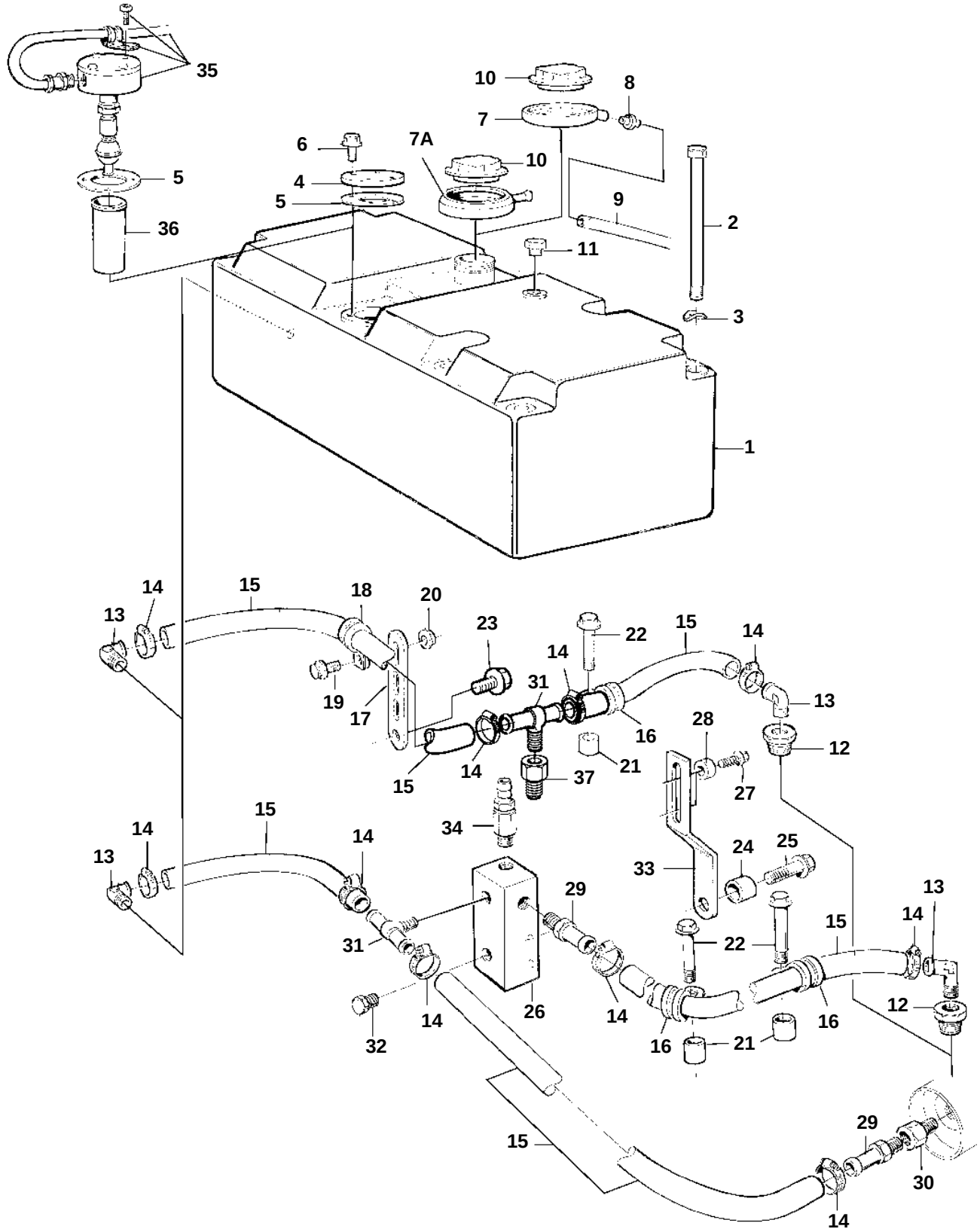

18052

TAMD165A-A

REF	PART NO.	QTY	DESCRIPTION		NOTES
1	866767	1	Expansion tank		
2	970966	6	Screw		
3	941908	6	Spring washer		
4	843760	1	Cover		
5	863715	1	Gasket		
6	965199	4	Screw		
7	1196982	1	Seal		SN-1101052283/XXXXX
7A	3828863	1	Rubber collar		SN1101052284/XXXXX-
					(11110005)
8		1	Nipple		SN-1101052283/XXXXX
9	192618	X	Hose		L=1100mm
10	1674083	1	Pressure cap		
11	861551	1	Plug		
12	479954	1	Nipple, exhaust manifold		
13	942758	2	Nipple		
14	943470	4	Hose clamp		
15	943367	X	Hose		
16	949747	1	Clamp		
17	965545	1	Bracket		
18	952630	1	Clamp		
19	967949	1	Screw		(965175)
20	949278	1	Lock nut		
21	820506	1	Spacer sleeve		
22	965184	1	Screw		
23	946379	1	Screw, timing gear cover		(973083)
31	948092	1	Nipple		
37	862109	1	Nipple, collecting pipe		