TAMD103A-A

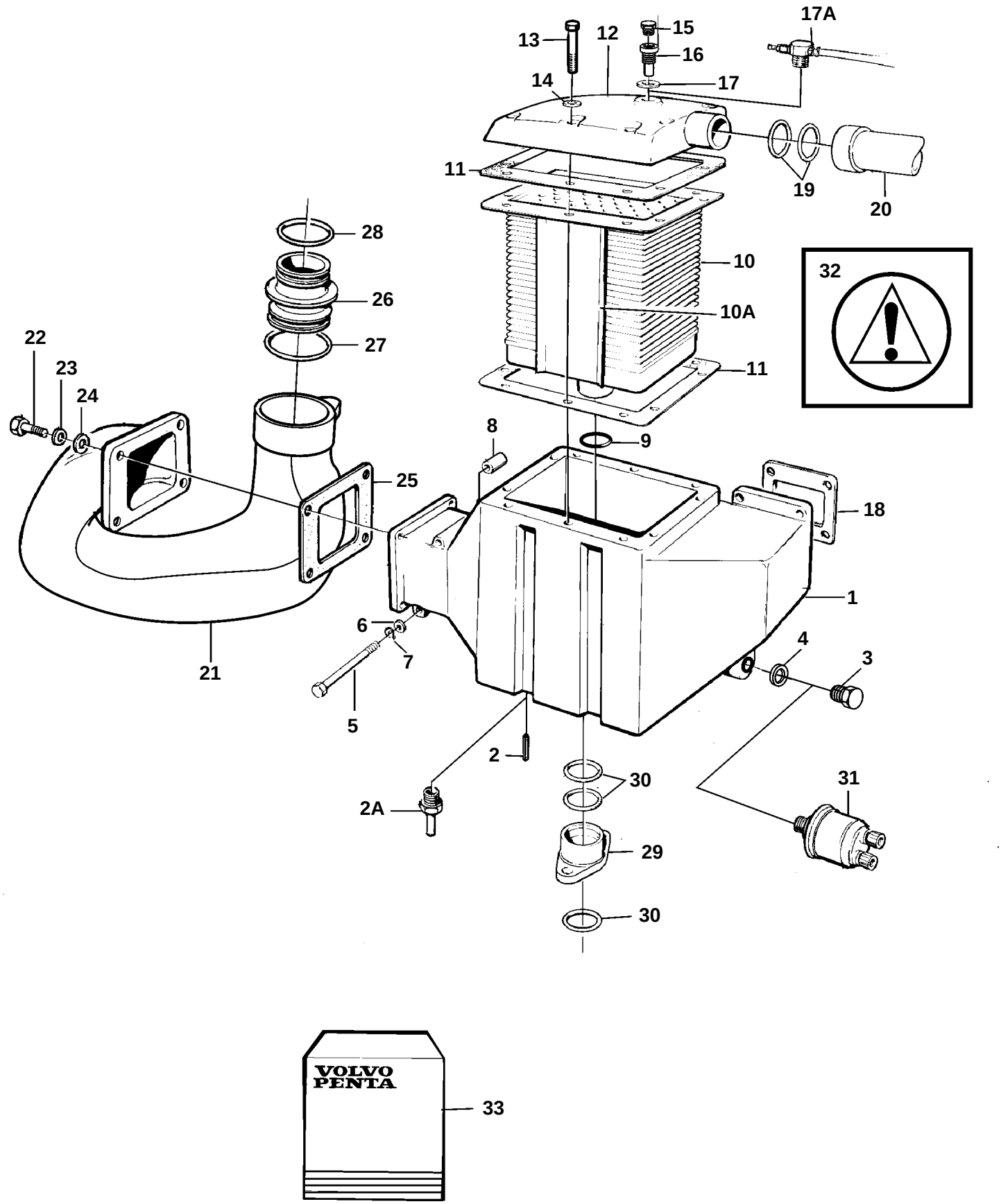

17938

TAMD103A-A

REF	PART NO.	QTY	DESCRIPTION		SEE SEC.	NOTES
1		1	Housing			REPLACED BY 876797
	876797	1	Housing			
2		1	· Pin			FOR 842392
2A	943513	1	· Nipple			FOR 876797
3	960632	1	Plug			
4	947624	1	Gasket			
5	959794	2	Screw			L=127mm
6	941907	2	Spring washer			
7	191172	2	Washer			
8	843028	2	Spacer sleeve			
9	1664473	1	O-ring			
10	866622	1	Insert			CLASSIFIED
10A	849147	1	Sealing plate			
11	3827399	2	Gasket			
12	843590	1	Cover			HEAT EX.
	836014	1	Cover			K.C
13	959952	10	Screw			
14	941670	10	Washer			
15	823662	1	Plug			HEAT EX.
16	823661	1	Zinc anod			HEAT EX.
17	836169	1	Gasket			HEAT EX.
17A			Connector			K.C
18	862589	1	Gasket			
19	925092	2	O-ring			NOT K.C
20	3825372	1	Coolant pipe, heat exchanger			NOT K.C
21	3829587	1	Air tube			
22	956570	4	Screw			
23	941907	4	Spring washer			
24	955894	4	Washer			
25	864758	1	Gasket			
26	469510	1	Intermediate pipe, turbo			
27	469508	1	Sealing ring			
28	864722	1	Sealing ring			
29			Connectoroil cooler		848	
30	925092	3	O-ring			
31		1	Pressure sensorturbo			SEE GROUP 30
32	3827294	1	Decal			"WARNING". For hot areas.
33	876295	1	Gasket kit, intercooler			SEE GROUP 99