EXHAUST MANIFOLD AND INSTALLATION COMPONENTS: AQD70BL

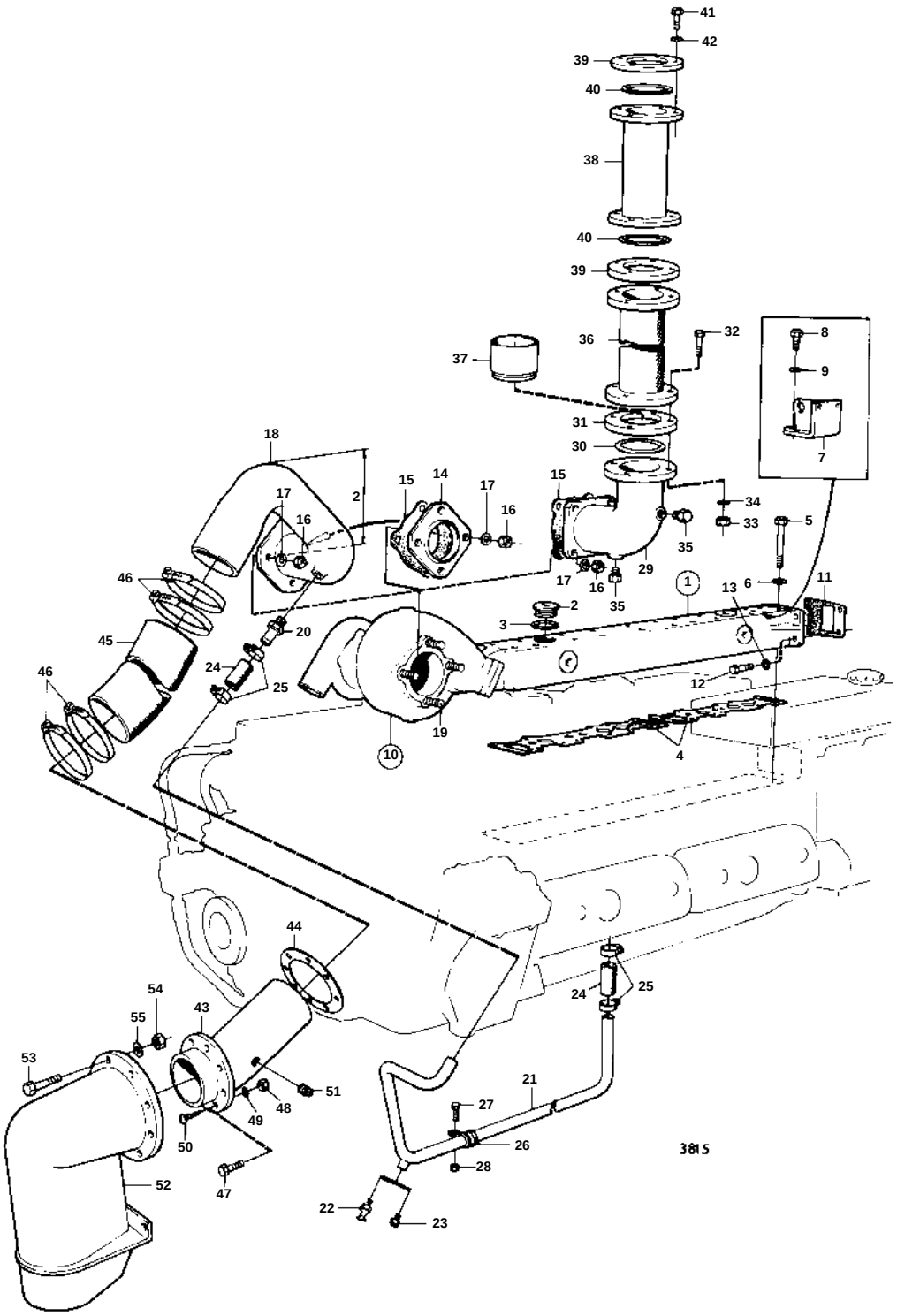

REF	PART NO.	QTY	DESCRIPTION		SEE SEC.	NOTES
1	836371	1	Exhaust pipe			
2	467367	6	· Plug			
3	469328	6	· Gasket	IK		
4	842531	2	Gasket	IK		
5	955544	6	Screw			L = 102 MM
	942268	2	Screw			L = 127 MM
	943254	12	Screw			L = 120 MM
6	942336	20	Spring washer			
7	836385	1	Bracket			
8	940115	1	Screw			L = 25 MM
9	942336	1	Spring washer			
10		1	TURBO		02B-1700	
11	836820	1	Gasket	IK	02B-0650	
12	940160	4	Screw		02B-0650	
13	941909	4	Spring washer		02B-0650	
15	424631	1	Gasket			
16	943927	4	Nut			
17	941908	4	Spring washer			
18	837116	1	Riser			
20	815238	1	Hose attachment			
21	837144	1	Tube		02B-0350	
22	82745	1	Tap			
24	941799	X	Hose			L = 65 MM
25	943476	4	Hose clamp			
26	943717	2	Clamp			
27	950060	2	Screw			
28	955826	2	Nut			
43	837201	1	Table fitting			
44	836758	1	Gasket			
45	828489	X	Exhaust hose			
46	943485	4	Clamp			
47	941815	8	Screw			ALT L = 45 MM
48	940190	8	Nut			ALT
49	836768	8	Washer			ALT
50	836769	8	Wood screw			ALT L = 38 MM
51	807044	1	Plug			
52	836823	1	Muffler			
53	959942	16	Screw			
54	940190	16	Nut			
55	940191	16	Washer			
		1	EXHAUST SYSTEM FOR TWIN INSTALLATION		02B-2750	