MD5

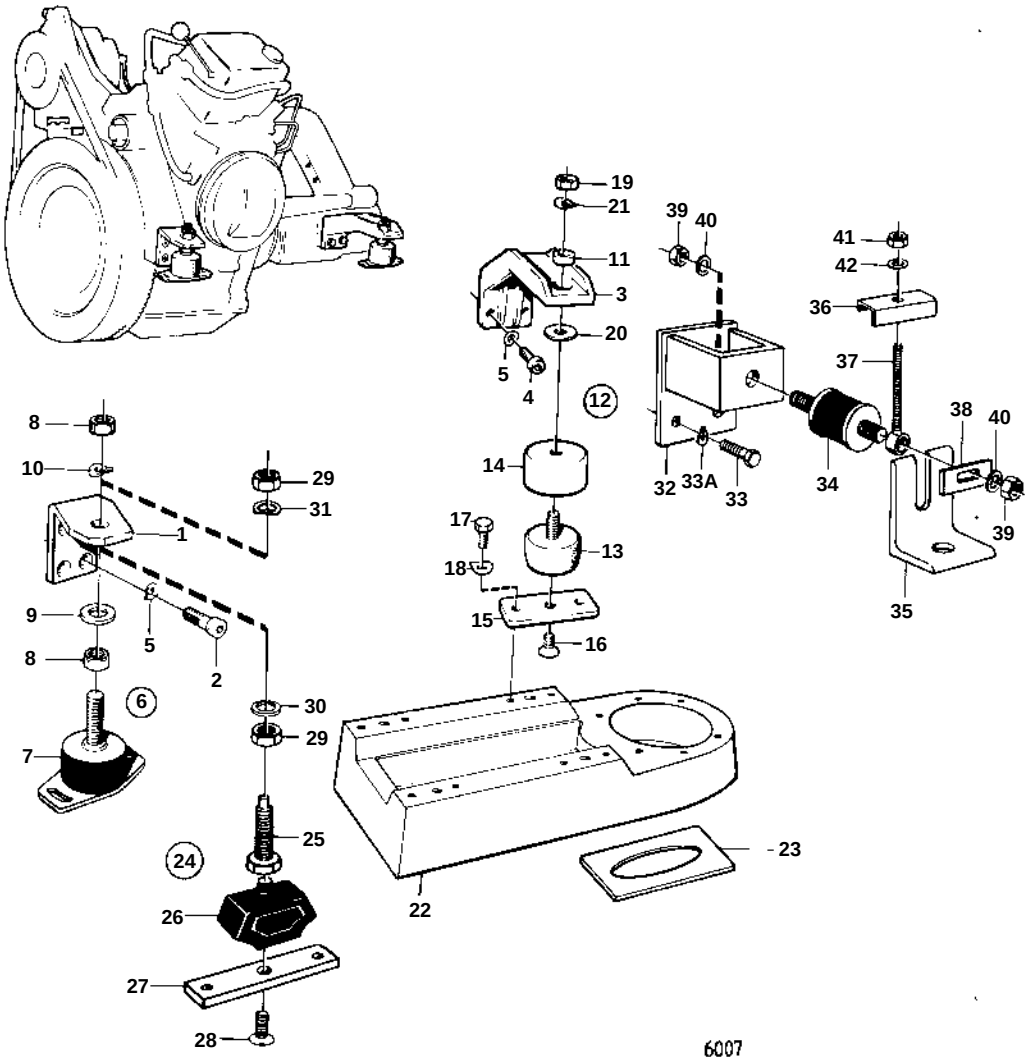
19
21
39
40
41
42
11
3
36
20
37
5
4
12
8
38
40
10
29
14
32
33A
33
34
31
17
1
13
39
18
9
15
35
5
16
8
2
6
30
29
7
25
24
23
22
26
27
28
6007

MD5

REF	PART NO.	QTY	DESCRIPTION		NOTES
1	838242	1	Bracket		P. MD5A, MD5A/100S.
1	838243	1	Bracket		S.B. MD5A, MD5A/100S.
2	946291	8	Screw		
3	838161	2	Bracket		MD5A, MD5A/100S.
4	959221	6	Screw		MD5A, MD5A/100S.
5	941907	14	Spring washer		MD5A, MD5A/100S.
6		1	RUBBER KIT		(838239)
7	838240	4	· Rubber element		
8	955805	8	· Nut		
9	955900	4	· Washer		
10	941912	4	· Spring washer		
11	850302	4	Spacer sleeve		MD5A/100S
12		1	RUBBER KIT		MD5A/100S
13	833950	4	· Rubber cushion		
14	807228	4	· Sleeve		
15	850222	4	· Attaching plate		
16	947936	4	· Screw		
17	940115	8	· Screw		
18	942336	8	· Spring washer		
19	955850	4	· Nut		
20	955898	4	· Washer		
21	940280	4	· Spring washer		
22	850220	1	Engine bed		MD5A/100S
23	850353	1	Cover plate		MD5A/100S