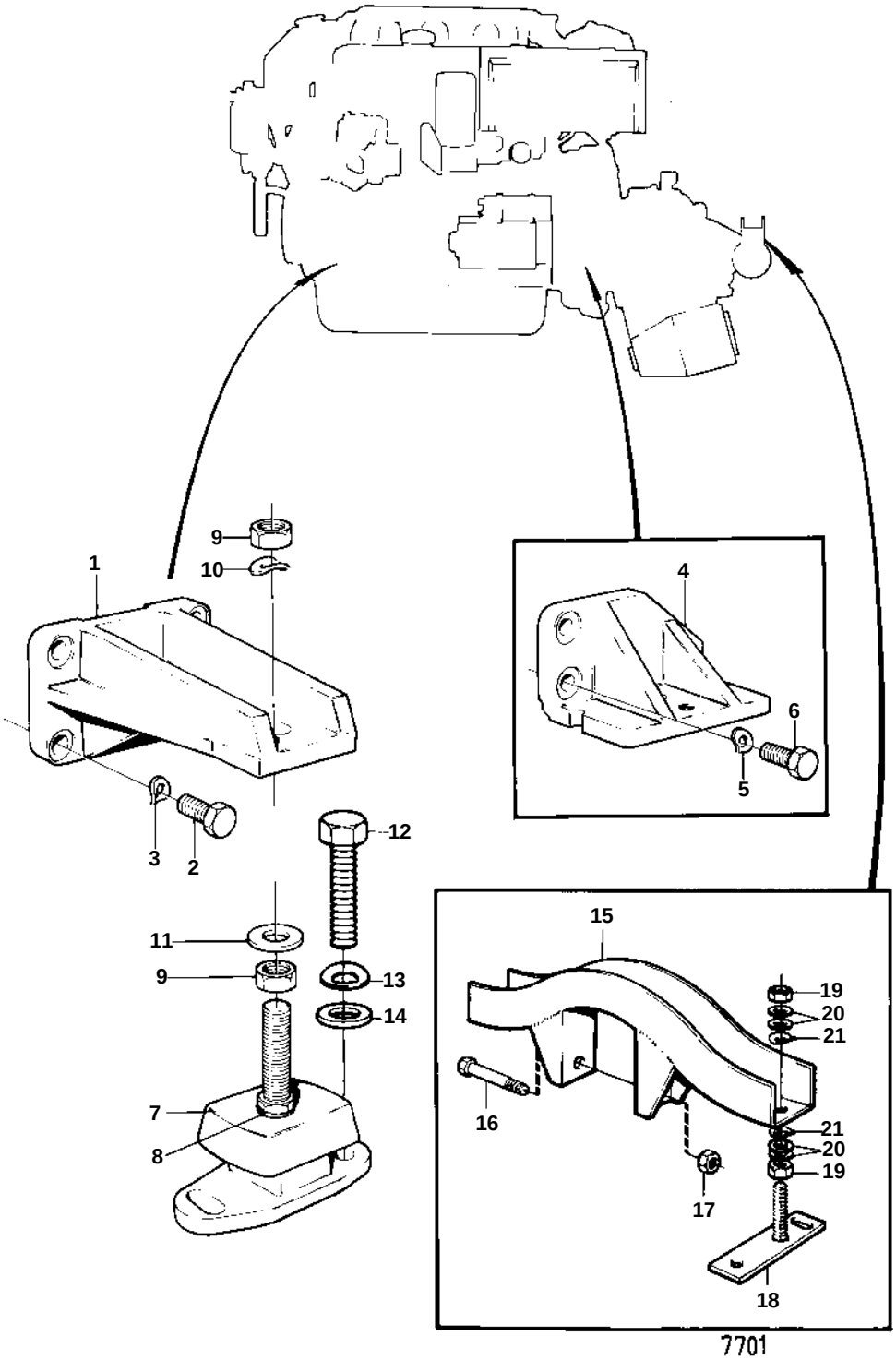
9
10
1
3
2
12
11
9
13
14
7
8
4
6
5
15
19
20
21
16
21
20
19
17
18
7701

REF	PART NO.	QTY	DESCRIPTION		SEE SEC.	NOTES
1	829517	2	Bracket			
2	955342	8	Screw			FOR FRONT MOUNTED FUEL FILTER.
	955342	6	Screw			FOR SIDE MOUNTED FUEL FILTER.
	955344	2	Screw	IK		SEE GROUP 2C. FOR SIDE MOUNTED FUEL FILTER.. INCLUDED IN INSTALLATION KIT 838978.
3	940143	8	Lock washer			
4	829515	1	Bracket			P
	829516	1	Bracket			S.B
5	940143	6	Lock washer			
6	955341	6	Screw			
7	846764	4	Rubber element			
			Bulletin 44-26		44-26-EN	Reinforced Rubber Cushion
8	955900	4	・ Washer			
9	955805	8	Nut			
10	941912	4	Spring washer			
11	191940	6	Washer			
	955900	2	Washer			
12	955321	8	Screw			
13	941908	8	Spring washer			
14	960148	8	Washer			