25 Heat Exchanger and Exhaust Manifold for Engine with SX Drive: TAMD22P-B

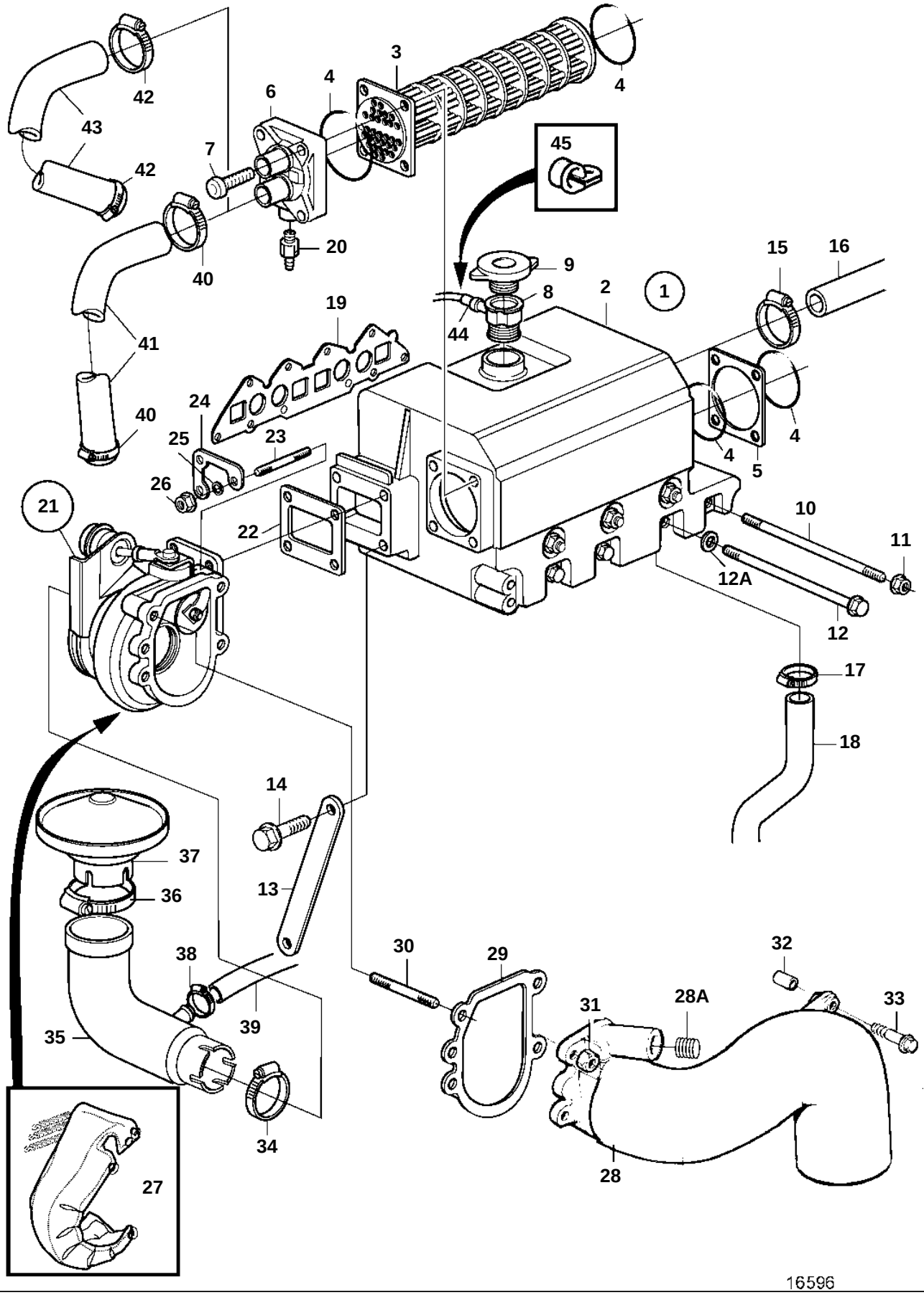

REF	PART NO.	QTY	DESCRIPTION		NOTES
1	3580815	1	Heat exchanger		
2			Housing		
3	3580817	1	· Insert		
4	3580818	4	· O-ring		
5	3580968	1	· Plate		
6	3580820	1	· Cover		
7	959224	4	· Screw		
8			· Rim		
9	866761	1	· Pressure cap		
10	980093	2	Stud		
11	945408	2	Flange nut		
12	968006	8	Screw		
12A	941907	8	Spring washer		
13	3580853	1	Stay		
14	946173	2	Flange screw		
15	961670	1	Hose clamp		
16	859800	1	Hose		Thermostat housing-heat exchanger.
17	961670	1	Hose clamp		
18	3580930	1	Hose		Heat exchanger-water pump.
19	859785	1	Gasket		
20	966871	1	Tap		
21	3581150	1	Turbo		
	3802092	1	Turbocharger, exch		Exchange unit
22	859834	1	Gasket		
23	859833	4	Stud		
24	861402	1	Bracket		
25	955894	3	Washer		
26	948645	4	Lock nut		
27	861401	1	Protecting casing		
28	3580979	1	Exhaust riser		
28A	982121	3	Plug		
29	861414	1	Gasket		
30	953045	4	Stud		
31	945408	4	Flange nut		
32	823494	1	Spacer sleeve		
33	965218	1	Screw		
34	961672	1	Clamp		
35	3580825	1	Connection pipe		
36	872531	1	Hose clamp		(961675)
37	861411	1	Air inlet		
38	961665	1	Hose clamp		
39	6646938	1	Hose		Oil filling-air filter.
40	961669	2	Hose clamp		
41	3581176	1	Hose		Heat exchanger-exhaust riser.
42	961669	2	Hose clamp		
43	3580880	1	Hose		Heat exchanger-after cooler.
44	859814	1	Hose		
45	859815	1	Clamp		