MD22P-B

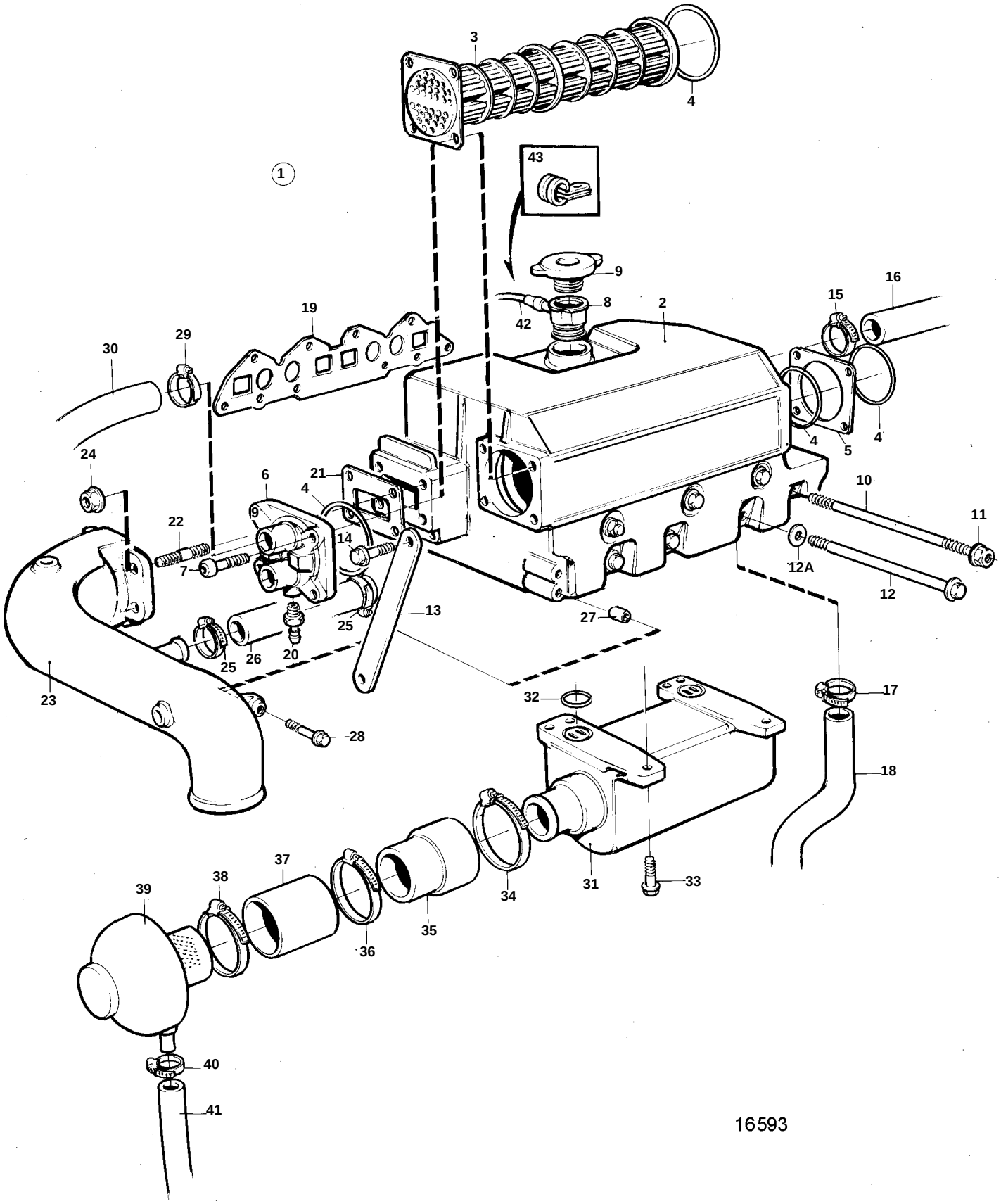
3
4
43
1
9
8
42
2
16
15
19
29
30
4
5
4
24
6
21
4
10
11
22
9
14
7
12A
12
13
27
25
26
20
25
23
32
17
28
18
37
38
39
31
33
34
35
36
40
41
16593

MD22P-B

REF	PART NO.	QTY	DESCRIPTION		NOTES
1	3580815	1	Heat exchanger		
2		1	· Housing		
3	3580817	1	· Insert		
4	3580818	4	· O-ring		
5	3580968	1	· Plate		
6	3580820	1	· Cover		
7	959224	4	· Screw		
8		1	· Rim		
9	866761	1	· Pressure cap		
10	980093	2	Stud		
11	945408	2	Flange nut		
12	968006	8	Screw		
12A	941907	8	Spring washer		
13	3580853	1	Stay		
14	946173	2	Flange screw		
15	961670	1	Hose clamp		
16	859800	1	Hose		Thermostat housing-heat exchanger.
17	961670	1	Hose clamp		
18	3580930	1	Hose		Heat exchanger-water pump.
19	859785	1	Gasket		
20	966871	1	Tap		
21	859834	1	Gasket		
22	859833	4	Stud		
23	3580978	1	Exhaust riser		
24	945408	4	Flange nut		
25	961669	2	Hose clamp		
26	3580882	1	Hose		Heat exchanger-exhaust riser.
27	823494	1	Spacer sleeve		
28	965218	1	Screw		
29	961669	1	Hose clamp		
30	3580821	1	Hose		Sea water pump-heat exchanger.
31	3580848	1	Inlet pipe		
32	3580849	2	O-ring		
33	959224	6	Screw		
34	961674	1	Clamp		
35	859830	1	Hose		
36	872531	1	Hose clamp		
37	859832	1	Adapter		
38	961672	1	Clamp		
39	859831	1	Muffler		
40	872531	1	Hose clamp		
41	6646938	1	Hose		Oil filling-inlet silencer.
42	859814	1	Hose		
43	859815	1	Clamp		