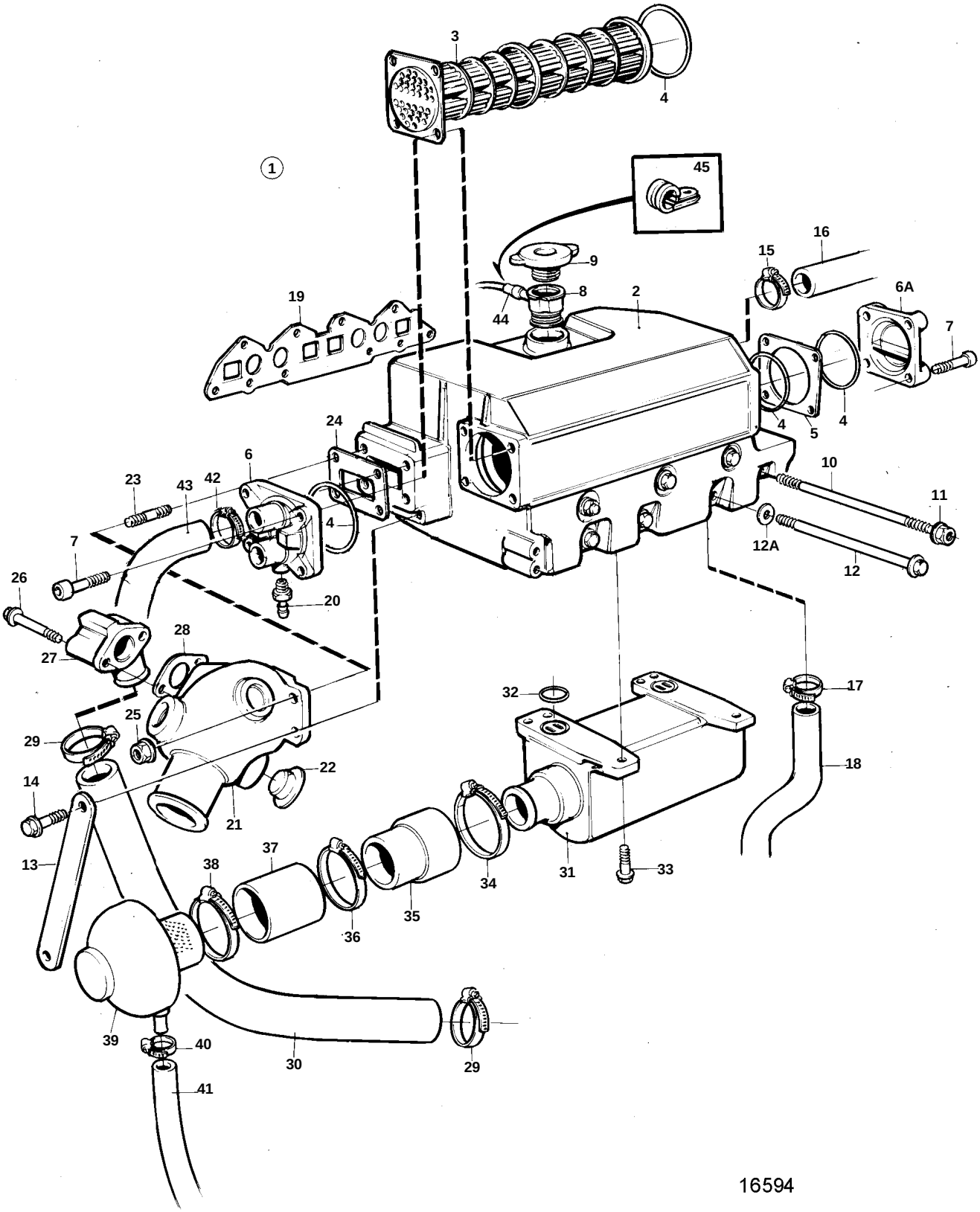
3
4
1
45
16
15
9
8
2
6A
19
44
7
24
4
5
4
6
10
23
43
42
11
4
12A
7
12
26
20
28
27
32
17
25
29
22
18
14
21
37
13
38
31
33
34
35
36
39
40
30
29
41
16594

REF	PART NO.	QTY	DESCRIPTION		NOTES
1	3580815	1	Heat exchanger		
2		1	· Housing		
3	3580817	1	· Insert		
4	3580818	4	· O-ring		
5	3580968	1	· Plate		
6	3580820	1	· Cover		
7	959224	4	· Screw		
8		1	· Rim		
9	866761	1	· Pressure cap		
10	980093	2	Stud		
11	945408	2	Flange nut		
12	968006	8	Screw		
12A	941907	8	Spring washer		
13	3580853	1	Stay		
14	946173	2	Flange screw		
15	961670	1	Hose clamp		
16	859800	1	Hose		Thermostat housing-heat exchanger.
17	961670	1	Hose clamp		
18	3580930	1	Hose		Heat exchanger-water pump.
19	859785	1	Gasket		
20	966871	1	Tap		
21	861574	1	Exhaust riser		
22	11997805	3	· Plug		
23	859833	4	Stud		
24	859834	1	Gasket		
25	945408	4	Flange nut		
26	948217	2	Flange screw		
27	859836	1	Connector		
28	859835	1	Gasket		
29	961669	2	Hose clamp		
30	3580885	1	Hose		Heat exchanger-exhaust riser.
31	3580848	1	Inlet pipe		
32	3580849	2	O-ring		
33	959224	6	Screw		
34	961674	1	Clamp		
35	859830	1	Hose		
36	872531	1	Hose clamp		
37	859832	1	Adapter		
38	961672	1	Clamp		
39	859831	1	Muffler		
40	872531	1	Hose clamp		
41	6646938	1	Hose		Oil filling-inlet silencer.
42	961669	1	Hose clamp		
43	3580821	1	Hose		Sea water pump-heat exchanger.
44	859814	1	Hose		
45	859815	1	Clamp		