MD22P-B, TMD22-B, TMD22P-C, TAMD22P

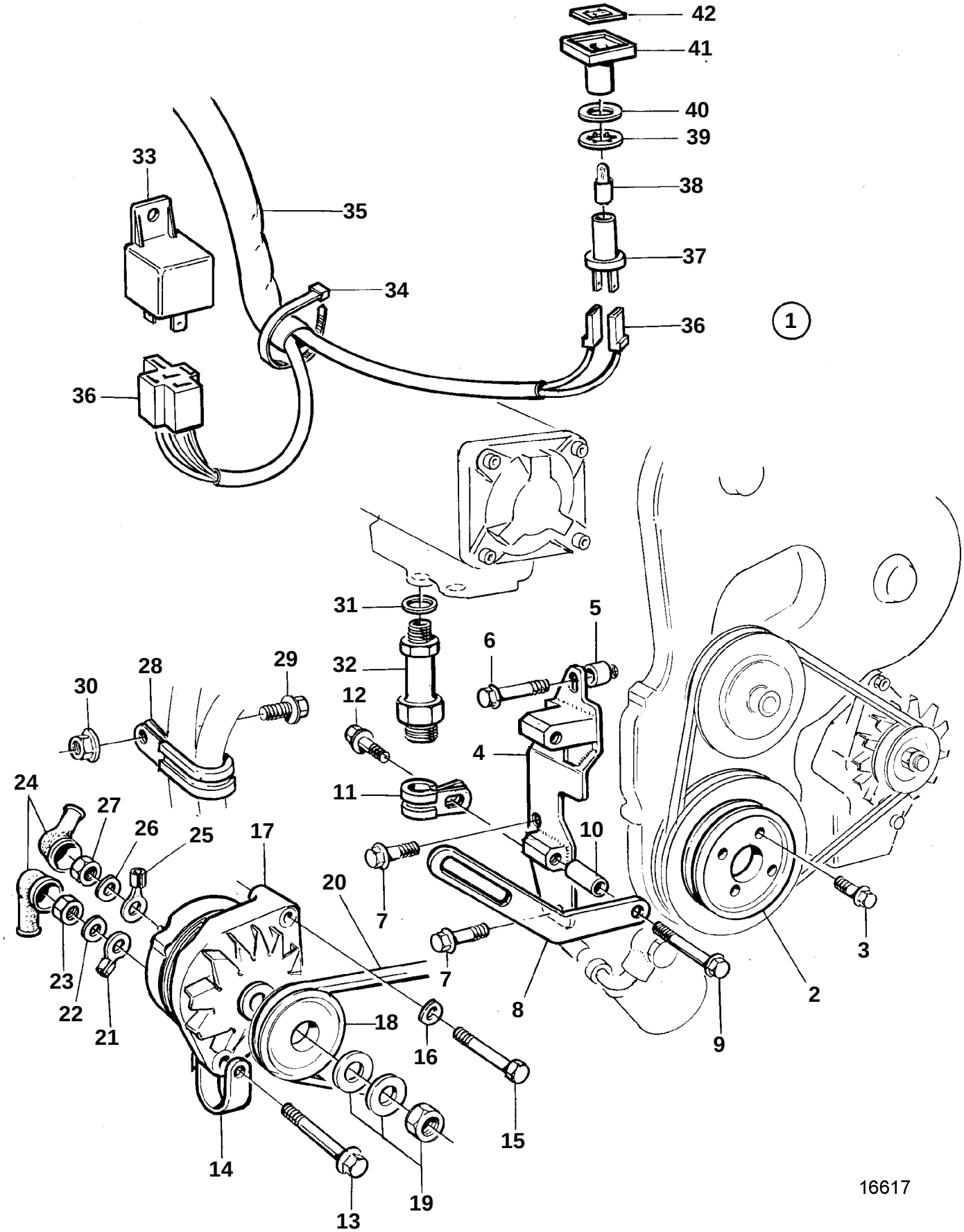

MD22P-B, TMD22-B, TMD22P-C, TAMD22P

REF	PART NO.	QTY	DESCRIPTION		SEE SEC.	NOTES
1	3581045	1	Alternator kit			
2	3580881	1	· Pulley			
3	946671	4	· Flange screw			
4	3580808	1	· Bracket			
5	842930	1	· Spacer sleeve			L=10mm
6	946329	1	· Flange screw			
7	946441	2	· Screw			
8	859820	1	· Lever			
9	965181	1	· Screw			
10	823497	1	· Sleeve			L=52mm
11	949746	1	· Clamp			
12	947107	1	· Flange screw			
13	947760	1	· Flange screw			
14	466735	1	· Tensioning eyelet			
15	955699	1	· Screw			
16	955896	1	· Washer			
17	872235	1	· Alternator			12V, 60A
	3803260	1	· Alternator,exch			Exchange unit
18	873343	1	· Pulley			
19	6212688	1	Mounting kit			
20	978460	1	· V-belt			
21	940335	1	· Cable terminal			
22	941906	1	· Spring washer			
23	955781	1	· Nut			
24	842150	2	· Protective cap			
25	881512	1	· Cable terminal			
26	941905	1	· Spring washer			
27	955780	1	· Nut			
28	949386	2	· Clamp			
29	947107	2	· Flange screw			
30	945408	2	· Flange nut			
31	957184	2	· Washer			(6613687)
32	859675	2	· Fitting			
33	1324492	1	· Relay			(872300)
34	948211	10	· Strip clamp			
35	838542	1	· Cable trunk			
36		X	· · Cables and terminals		1963	
37	808175	1	· Bulb socket			
38	19923	1	· Bulb			
39	967583	1	· Retainer			
40	829714	1	· Seal			
41	838455	1	· Retainer			
42	838457	1	· Symbol strip			