120S-E

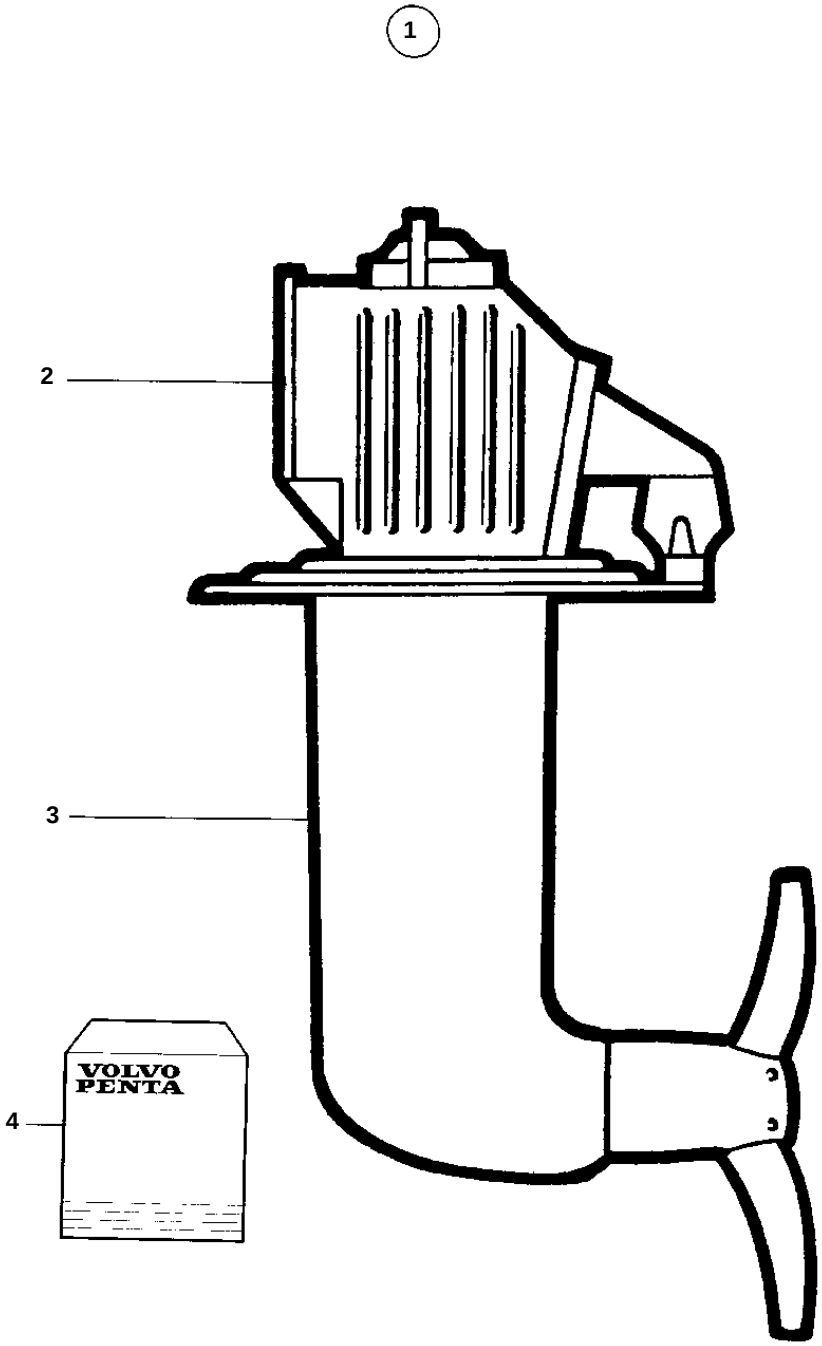

15116

120S-E

REF	PART NO.	QTY	DESCRIPTION		SEE SEC.	NOTES
1	873080	1	Drive			RATIO 2.2:1
2	873104	1	· Upper gear unit			
					349	
3	873107	1	· Gear under			
					350	
4	876391	1	Gasket kit			SEE GROUP 99
	854934	1	Mounting kit			SEE GROUP 99