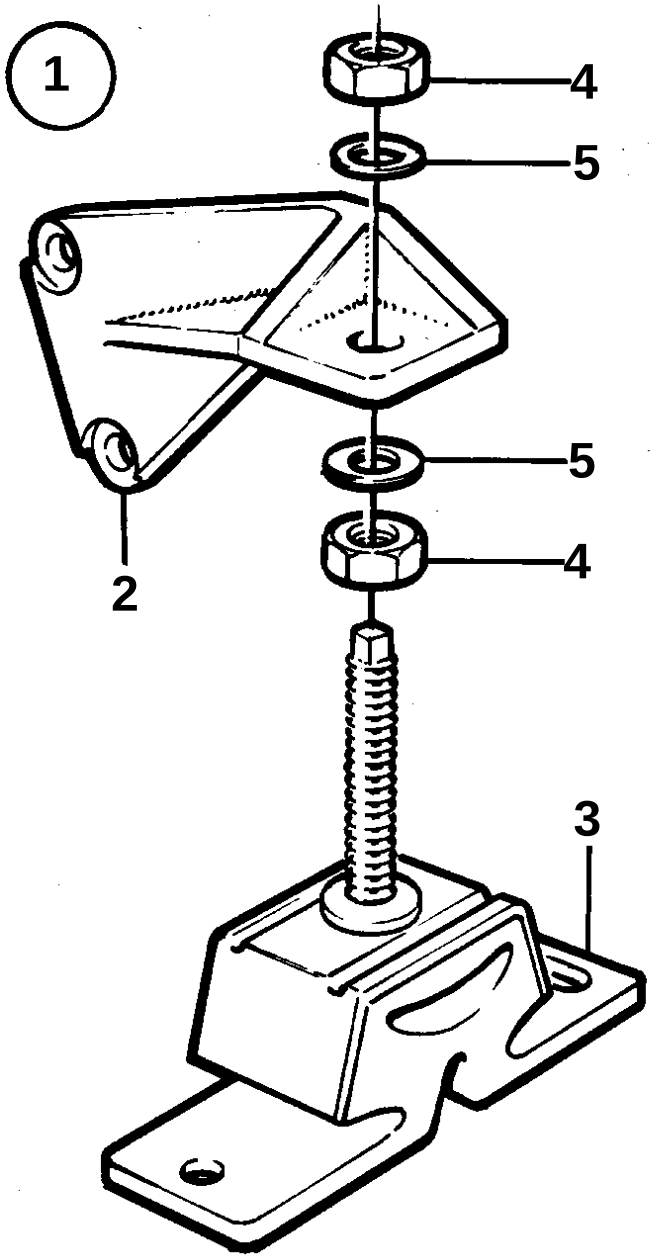

5680

MD11

REF	PART NO.	QTY	DESCRIPTION		NOTES
1	829861	1	Local part		
2	829853	1	· Bracket		S.B. REAR.
	829854	1	· Bracket		P. REAR.
3	840169	2	· Rubber element		FORWARD.
	840170	2	· Rubber element		REAR.
4	955805	4	· Nut		FORWARD.
	955806	4	· Nut		REAR.
5	829892	8	· Lock washer		FORWARD.
	829893	8	· Lock washer		REAR.