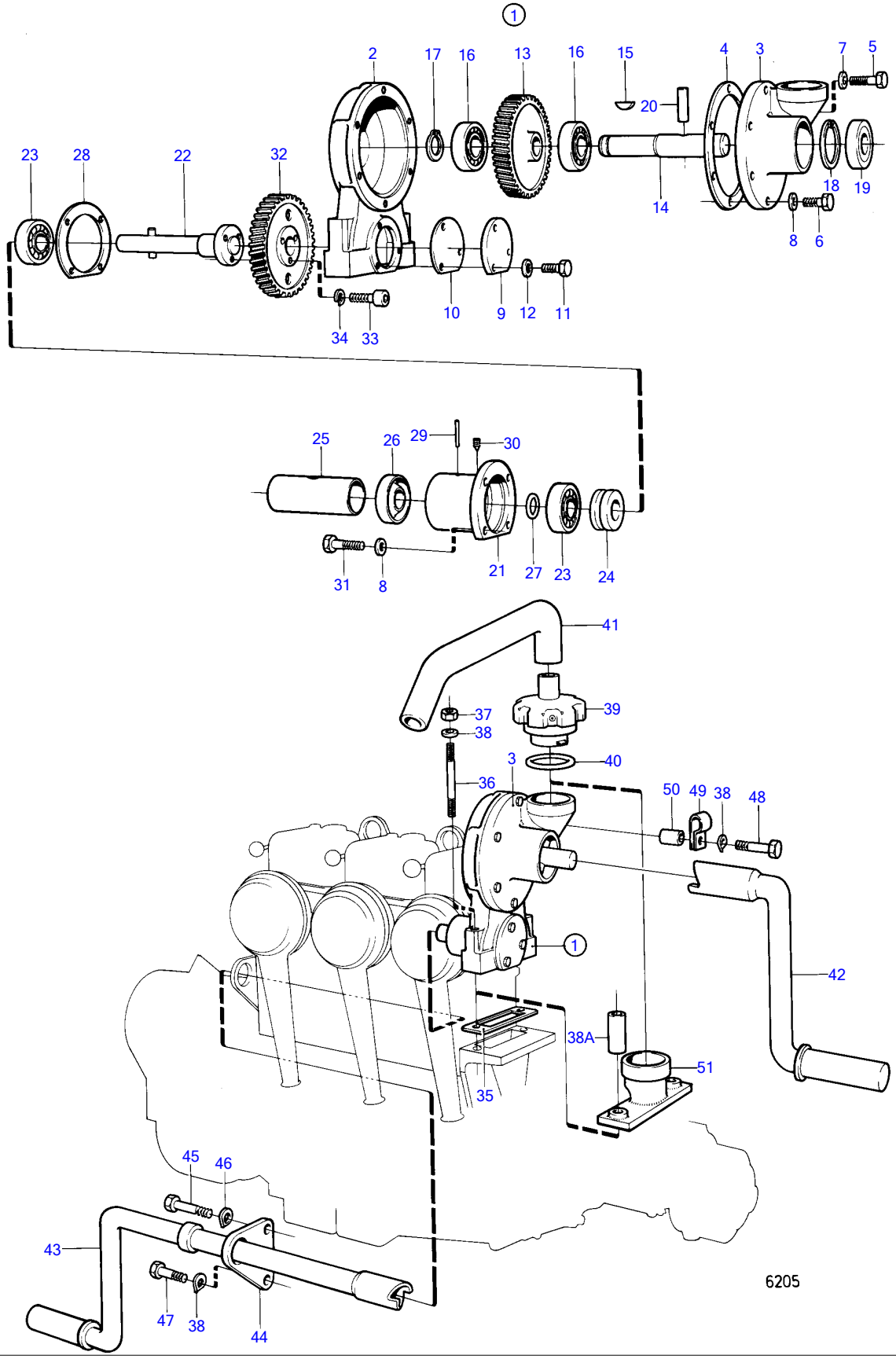
1
2
17
16
13
16
15
4
3
7
5
20
23
28
22
32
14
18
19
8
6
10
9
12
11
34
33
25
26
29
30
31
8
21
27
23
24
41
37
38
39
3
40
36
50
49
38
48
1
42
38A
51
35
45
46
43
47
38
44
6205

REF	PART NO.	QTY	DESCRIPTION	SEE SEC.	NOTES
1	833573	1	Hand start		MD17D/HD-HE SPEC 867684., MD17C SPEC 867211, 867340., OBSOLETE PART
2		1	▪ HOUSING		
3	833330	1	▪ Cover		OBSOLETE PART
4	807276	1	▪ Gasket		
5	955271	5	▪ Hexagon screw		
6	955270	1	▪ Hexagon screw		
7	941906	5	▪ Spring washer		
8	11991	5	▪ Gasket		
9	897254	1	▪ Cover		OBSOLETE PART
10	897255	1	▪ Gasket		
11	955243	3	▪ Hexagon screw		OBSOLETE PART
12	18806	3	▪ Gasket		
13	807280	1	▪ Gear		OBSOLETE PART
14	807281	1	▪ Shaft		OBSOLETE PART
15	910117	1	▪ Woodruff key		OBSOLETE PART
16	181113	2	▪ Ball bearing		OBSOLETE PART
17	914454	1	▪ Snap ring		OBSOLETE PART
18	914524	1	▪ Snap ring		OBSOLETE PART
19	833760	1	▪ Sealing ring		Replaced by 3886602
	3886602	1	▪ Sealing ring		
20	952007	1	▪ Spring pin		OBSOLETE PART
21	833551	1	▪ Bearing carrier		OBSOLETE PART
22	833555	1	▪ Shaft		OBSOLETE PART
23	181119	2	▪ Ball bearing		OBSOLETE PART
24	833552	1	▪ Spacer sleeve		OBSOLETE PART
25	833553	1	▪ Spacer sleeve		OBSOLETE PART
26	833759	1	▪ Sealing ring		
27	955990	1	▪ O-ring		
28	807278	1	▪ Gasket		
29	951991	1	▪ Spring pin		OBSOLETE PART
30	963012	1	▪ Set screw		OBSOLETE PART
31	955271	4	▪ Hexagon screw		
32	840370	1	▪ Gear		OBSOLETE PART, (803344)
33	942001	3	▪ Hex. socket screw		
34	955948	3	▪ Toothed washer		
35	803361	X	Gasket		
				15092	
36	952989	1	Stud		OBSOLETE PART, L = 80 MM
	952990	1	Stud		OBSOLETE PART, L = 85 MM
	952990	1	Stud		OBSOLETE PART, MD17C SPEC 867340.
	924061	1	Stud		MD17C SPEC 867340., L = 32 MM
	924061	2	Stud		FOR BREATHER HOUSING 833601.
				15092	
37	955782	2	Hexagon nut	15092	
38	941907	2	Spring washer		
38A	833111	1	Spacer sleeve		OBSOLETE PART, MD17C SPEC 867340., , L = 50 MM
39	418954	1	Vent cover		
40	940096	1	Gasket		
41	833671	1	Rubber hose		OBSOLETE PART, SPEC 867146, 867147, MO 1668-1670, 1656-., MD17D/HD-HE SPEC 867684., MD17C SPEC 867211, 867340.
42	803920	1	Starter crank, REAR		
43	833566	1	Starter crank, FORWARD		OBSOLETE PART, SPEC 867146, 867147, MO 1668-1670, 1656-., SPEC 867119, 867231., MD17D/HD-HE SPEC 867684., MD17C SPEC 867211, 867340.
44	833562	1	Bracket		OBSOLETE PART, SPEC 867146, 867147, MO 1668-1670, 1656-., SPEC 867119, 867231., MD17D/HD-HE SPEC 867684., MD17C SPEC 867211, 867340.
45	955318	1	Hexagon screw		SPEC 867146, 867147, MO 1668-1670, 1656-., SPEC 867119, 867231., MD17D/HD-HE SPEC 867684., MD17C SPEC 867211, 867340.
46	941908	1	Spring washer		SPEC 867146, 867147, MO 1668-1670, 1656-., SPEC 867119, 867231., MD17D/HD-HE SPEC 867684., MD17C SPEC 867211, 867340.

REF	PART NO.	QTY	DESCRIPTION	SEE SEC.	NOTES
47	955297	1	Hexagon screw		SPEC 867146, 867147, MO 1668-1670, 1656-., SPEC 867119, 867231., MD17D/HD-HE SPEC 867684., MD17C SPEC 867211, 867340.
48	955295	1	Hexagon screw		ALT, L = 20 MM
	955293	1	Hexagon screw		ALT, L = 14 MM
49	940374	1	Clamp	15092	
50	823492	1	Spacer sleeve		ALT, L = 10 MM
51	833601	1	Ventilation housing		OBSOLETE PART, FOR ENGINE WITHOUT MANUAL STARTER.
				15092	