MD11C

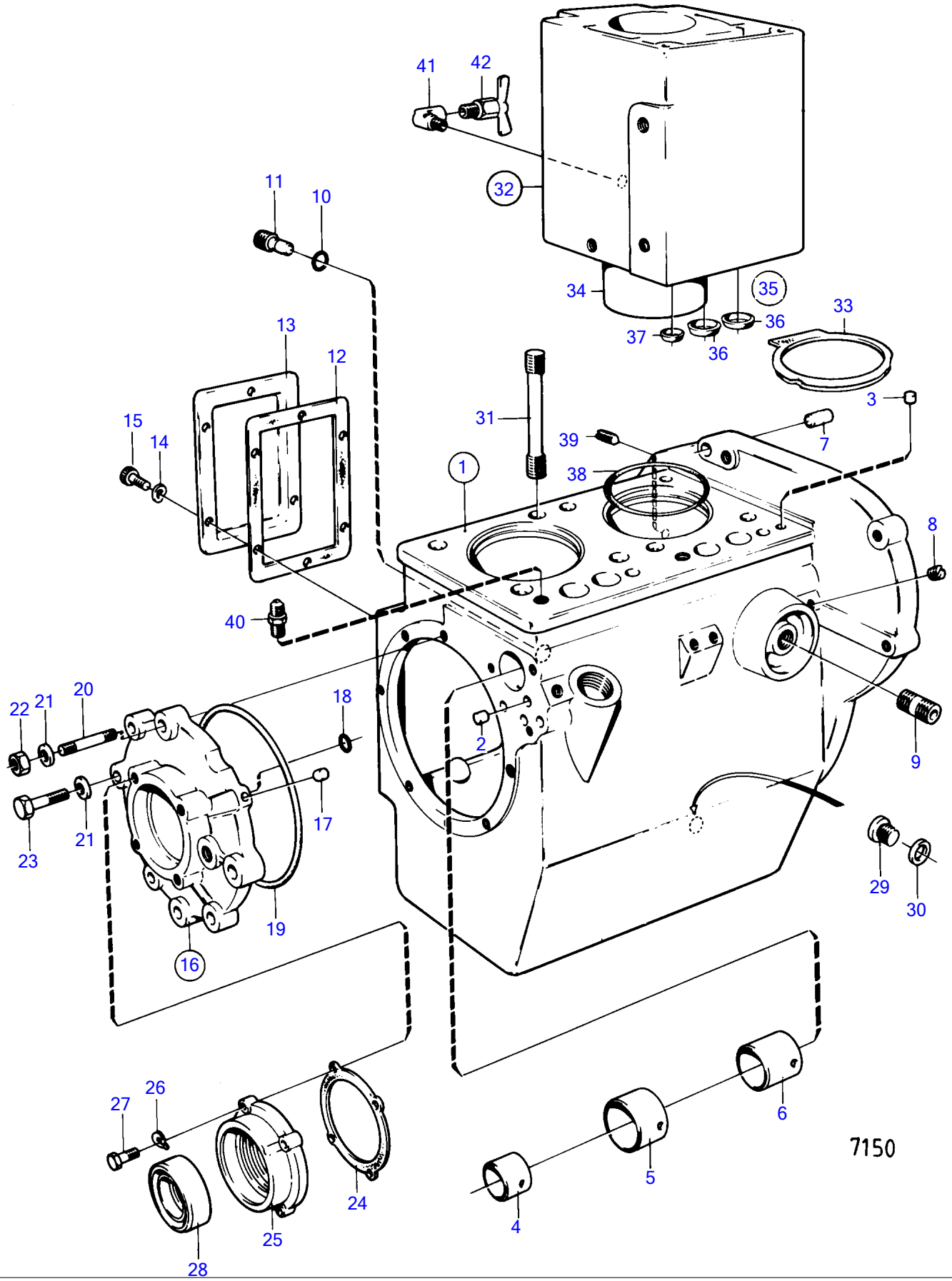
41
42
32
11
10
34
35
33
36
37
36
13
12
3
15
14
31
39
7
1
38
8
40
20
22
21
18
2
9
21
17
23
29
30
19
16
26
27
6
7150
5
24
4
25
28

MD11C

REF	PART NO.	QTY	DESCRIPTION	SEE SEC.	NOTES
1	833812	1	Crankcase		OBSOLETE PART
2	955075	2	▪ Plug		
3	955073	1	▪ Plug		OBSOLETE PART
4	803330	1	▪ Camshaft bushing		
5	833158	1	▪ Bearing		
6	405177	1	▪ Bearing		
7	950586	2	Pin	15087	
8	829589	3	Plug		OBSOLETE PART
9	418440	1	Nipple	15091	OBSOLETE PART
10	947789	1	O-ring		
11	897271	1	Set screw		OBSOLETE PART
12	833792	2	Gasket		
13	803258	2	Inspection lid		OBSOLETE PART
14	941907	12	Spring washer		
15	959219	12	Hex. socket screw		
16	833390	1	Bearing cover		OBSOLETE PART
17	955074	1	▪ Plug		OBSOLETE PART
18	946742	1	O-ring		
19	946743	1	O-ring		
20	946928	1	Stud		ENGINE WITH STARTER MOTOR., OBSOLETE PART
21	946075	9	Washer		
22	963107	1	Lock nut		
23	955322	4	Hexagon screw		L = 50 MM
	955318	1	Hexagon screw		ENGINE WITH STARTER MOTOR., L = 30 MM
	955320	1	Hexagon screw		ENGINE WITH STARTER MOTOR., L = 40 MM
	955326	2	Hexagon screw		ENGINE WITH STARTER MOTOR., L = 70 MM
24	803359	1	Gasket		
25	803236	1	Cover		OBSOLETE PART
26	941907	4	Spring washer		
27	955296	4	Hexagon screw		
28	803356	1	Sealing ring	15103	
29	833521	1	Plug		OBSOLETE PART
30	957181	1	Gasket		
31	897251	8	Stud	15090	OBSOLETE PART
32	833830	2	Cylinder jacket		OBSOLETE PART
33	833780	X	Spacer		TH = 0.2mm
	833781	X	Spacer		TH = 0.3mm
34	875549	2	Cylinder liner kit	15103	
35	875550	2	Sealing ring kit	15103	
36		4	▪ O-RING		
37		2	▪ O-RING		
38		6	▪ O-RING		
		2	▪ O-RING		
39	807054	1	Set screw		SEE GROUP 2C, OBSOLETE PART
40	829590	2	Nipple	15091	OBSOLETE PART
41	829588	1	Elbow nipple		OBSOLETE PART
	829588	1	Elbow nipple		SPEC 867421, -498, -499, -540., MO-52480, OBSOLETE PART
42	829592	2	Drain cock		