MD17C

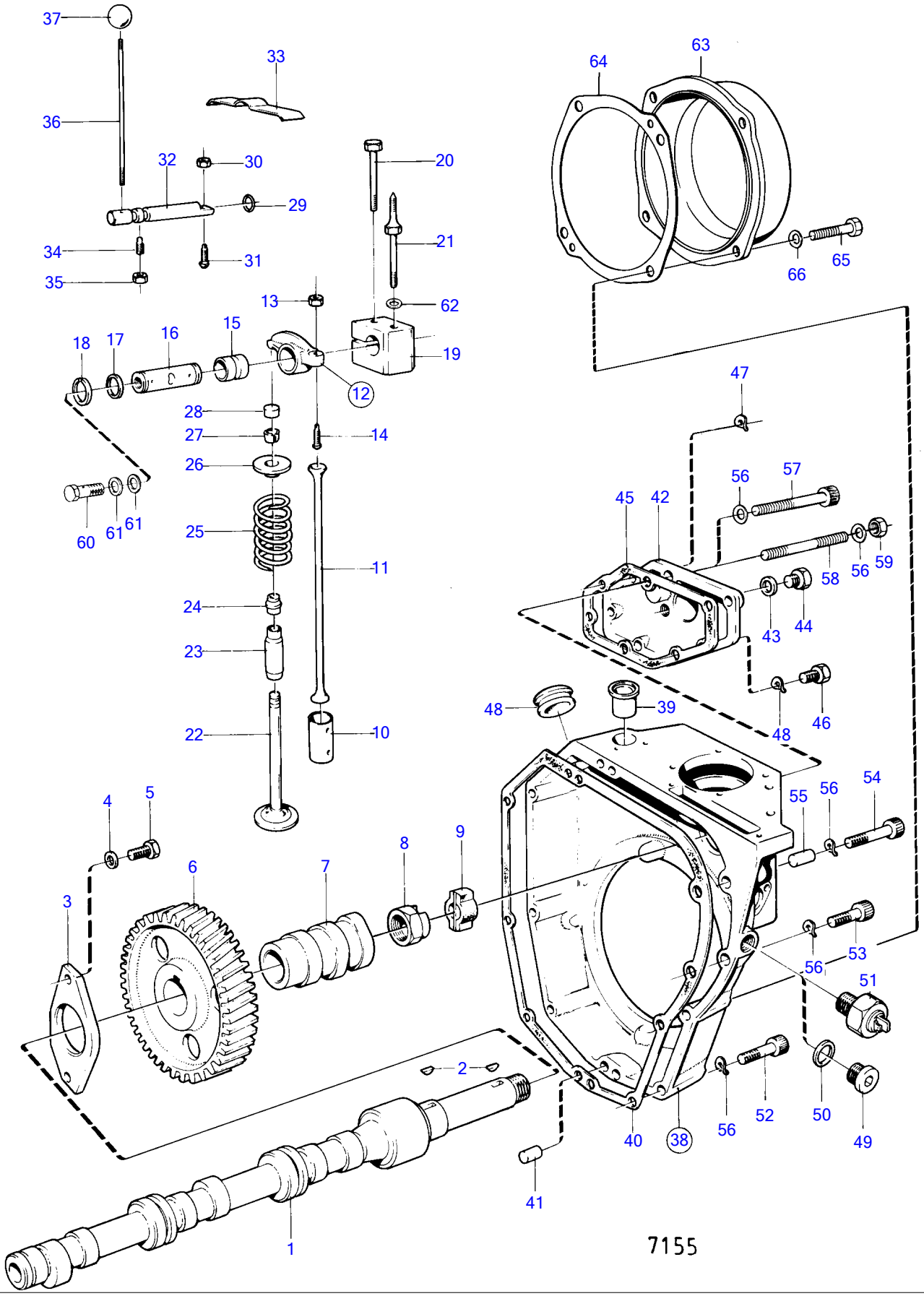
37
33
36
32
30
20
29
34
31
21
35
13
62
18
17
16
15
19
12
28
27
14
26
60
61
61
25
11
24
23
22
10
64
63
66
65
47
56
57
45
42
58
56
59
43
44
48
39
48
46
4
5
55
56
54
6
7
8
9
3
53
56
51
2
40
38
56
52
50
49
41
1
7155

MD17C

REF	PART NO.	QTY	DESCRIPTION	SEE SEC.	NOTES
1	833159	1	Camshaft		
2	910121	2	Woodruff key		OBSOLETE PART
3	807498	1	Washer		OBSOLETE PART
4	942411	2	Tab washer		OBSOLETE PART
5	955294	2	Hexagon screw		
6	833018	1	Gear		OBSOLETE PART
7	833484	1	Cam disc		OBSOLETE PART
8	833275	1	Nut		OBSOLETE PART
9	806256	1	Companion flange		
10	807393	6	Tappet		
11	403130	6	Push rod		
12	403561	3	Rocker arm, INTAKE		OBSOLETE PART
	803247	3	Rocker arm, EXHAUST		OBSOLETE PART
	403560	3	Rocker arm, EXHAUST		MD17C SPEC 867422, -423, -426, -427, -428., MD17D SPEC 867681, -682, -683., OBSOLETE PART
13	955800	6	• Hexagon nut		OBSOLETE PART
14	403155	6	• Ball stud		
15	18146	6	• Bushing		
16	833222	3	Rocker arm shaft		OBSOLETE PART
17	191173	6	Shim		TH = 0.2mm, OBSOLETE PART
18	914452	6	Snap ring		OBSOLETE PART
19	833223	3	Bearing box		OBSOLETE PART
20	955300	3	Hexagon screw		
21	833569	3	Screw	15090	
	829723	3	Screw		MD17C SPEC 867422, -423, -426, -427, -428., MD17D SPEC 867681, -682, -683.
22	833188	3	Valve		
	829620	3	Exhaust valve		
23	419653	3	Valve guide, INTAKE	15090	
	829867	3	Guide sleeve, EXHAUST	15090	
24	833347	3	Gasket, INTAKE		REPLACED BY 1306630., MO-20766
25	829622	6	Valve spring		
26	403314	6	Valve spring washer		
27	403315	12	Lock		
28	896580	6	Valve cap		
29	925053	3	O-ring		
30	955800	3	Hexagon nut		OBSOLETE PART
31	403155	3	Ball stud		
32	833499	3	Shaft		MO 634-, OBSOLETE PART
33	803604	3	Spring		OBSOLETE PART
34	919118	3	Set screw		OBSOLETE PART
35	955781	3	Hexagon nut		
36	945292	3	Stud		MO 634-
37	940344	3	Wing nut		MO 634-
38	833976	1	Timing gear casing		OBSOLETE PART
39	833041	1	• Bushing		OBSOLETE PART
40	833044	1	Gasket		
41	950586	2	Pin	15102	
42	833767	1	Hatch		MO 3847-, OBSOLETE PART
43	957175	1	Gasket		MO 3847-
44	16322	1	Plug		MO 3847-, OBSOLETE PART
45	833174	1	Gasket		
46	192356	1	Hexagon screw		L = 20 MM
	955273	4	Hexagon screw		L = 22 MM
47	941906	5	Spring washer		
48	61822	1	Rubber plug		
49	833521	1	Plug		ALT, OBSOLETE PART
50	957181	1	Gasket		ALT
51			REV. COUNTER SENDER		SEE GROUP 3
52	959247	4	Hex. socket screw		L = 70 MM
53	959245	2	Hex. socket screw		L = 60 MM
	959245	1	Hex. socket screw		MD17C/HD-RB.
54	947048	1	Screw		MD17C/HD-RB., OBSOLETE PART

MD17C

REF	PART NO.	QTY	DESCRIPTION	SEE SEC.	NOTES
	959250	2	Hex. socket screw		L = 90 MM
55	943835	1	Plug		MD17C/HD-RB.
56	942336	9	Spring washer		(941908)
57	943842	1	Screw		MO 13994-, OBSOLETE PART
58	17378	1	Stud		MO 13994-
59	955783	1	Hexagon nut		MO 13994-
60	74033	3	Hollow screw	15092	
61	957171	6	Gasket		
62	955894	6	Washer		
63	803834	1	End cover		MD17C/HD-BT., OBSOLETE PART
64	803227	1	Gasket		MD17C/HD-BT.
65	955319	4	Hexagon screw		MD17C/HD-BT.
66	942336	4	Spring washer		MD17C/HD-BT.