MD11C

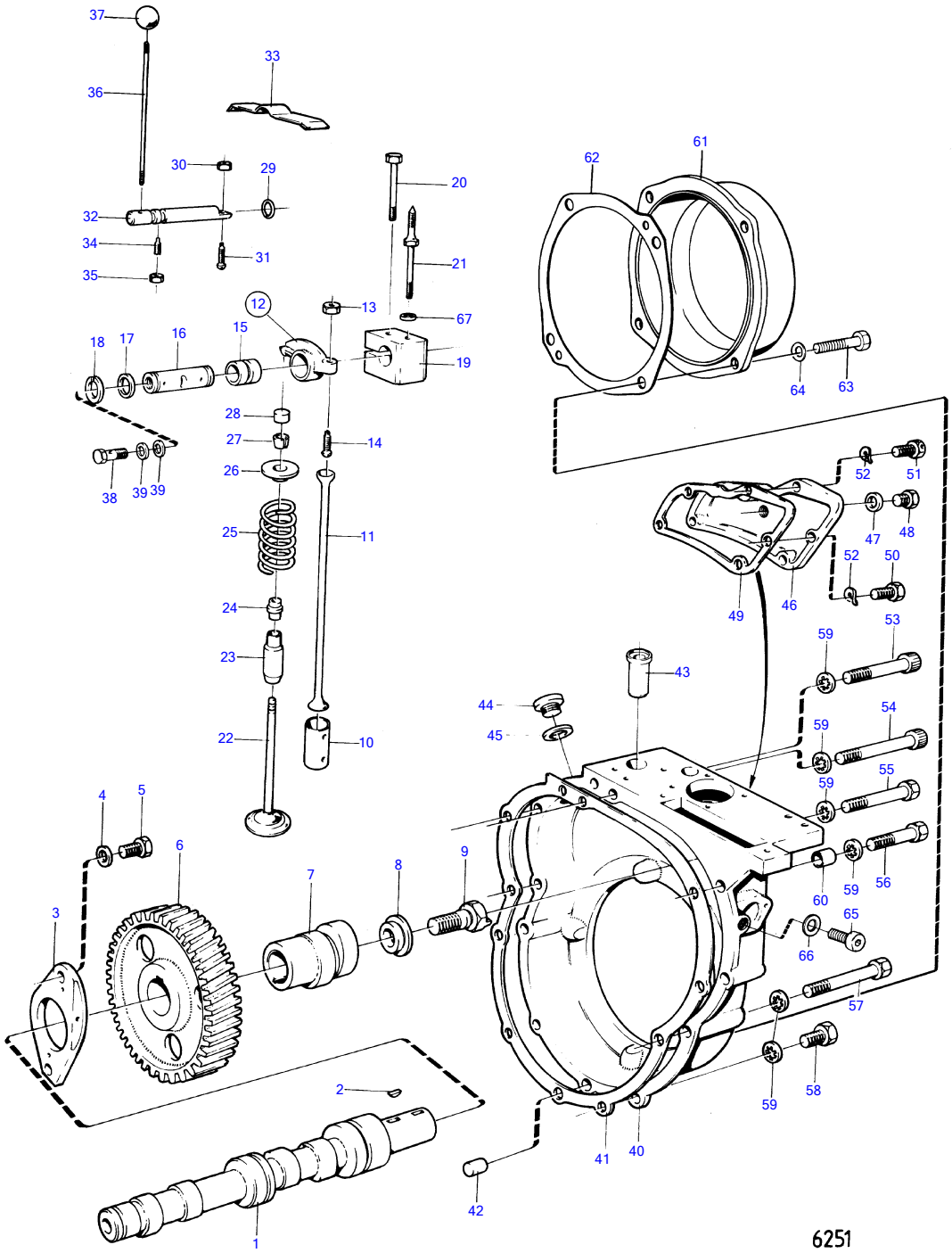
37
36
33
30
29
32
34
31
35
20
21
12
13
67
18
17
16
15
19
28
27
14
26
38
39
39
25
11
24
23
22
10
62
61
64
63
52
51
47
48
52
50
49
46
53
59
43
44
45
54
59
55
59
4
5
6
7
8
9
3
60
59
56
65
66
57
58
59
2
41
40
42
1
6251

MD11C

REF	PART NO.	QTY	DESCRIPTION	SEE SEC.	NOTES
1	833163	1	Camshaft		
2	910121	2	Woodruff key		OBSOLETE PART
3	405079	1	Flange		OBSOLETE PART
4	15256	2	Washer		OBSOLETE PART
5	955295	2	Hexagon screw		
6	405026	1	Gear		OBSOLETE PART
7	897248	1	Cam disc		OBSOLETE PART
8	803348	1	Guide washer		OBSOLETE PART
9	807031	1	Screw		SEE GROUP 2B, OBSOLETE PART
10	807393	4	Tappet		
11	403130	4	Push rod		
12	403561	2	Rocker arm, INTAKE		OBSOLETE PART
	803247	2	Rocker arm, EXHAUST		OBSOLETE PART
	403560	2	Rocker arm, EXHAUST		MD11C SPEC 867420, MD11C/110S SPEC 867421., OBSOLETE PART
13	955800	4	· Hexagon nut		OBSOLETE PART
14	403155	4	· Ball stud		
15	18146	4	· Bushing		
16	833222	2	Rocker arm shaft		OBSOLETE PART
17	191173	4	Shim		TH = 0.7mm, OBSOLETE PART
18	914452	4	Snap ring		OBSOLETE PART
19	833223	2	Bearing box		OBSOLETE PART
20	955300	2	Hexagon screw		
21	833569	2	Screw	15090	
	829723	2	Screw		MD11C SPEC 867420, MD11C/110S SPEC 867421.
22	833188	2	Valve		
	829620	2	Exhaust valve		
23	419653	2	Valve guide, INTAKE	15090	
	829867	2	Guide sleeve, EXHAUST	15090	
24	1306630	2	Valve stem seal, INTAKE		(833347)
25	829622	4	Valve spring		
26	403314	4	Valve spring washer		
27	403315	8	Lock		
28	896580	4	Valve cap		
29	925053	2	O-ring		
30	955800	2	Hexagon nut		OBSOLETE PART
31	403155	2	Ball stud		
32	833499	2	Shaft		MO 12822-, OBSOLETE PART
33	803604	2	Spring		OBSOLETE PART
34	919118	2	Set screw		OBSOLETE PART
35	955781	2	Hexagon nut		
36	945292	2	Stud		MO 12823-
37	940344	2	Wing nut		MO 12823-
38	74033	2	Hollow screw	15091	
39	957171	4	Gasket		
				15091	
40		1	TIMING GEAR COVER		REPLACED BY TIMING GEAR COVER 829654 + PLUG 833521 + PACKING 957181., EARLY TYPE
	829654	1	Timing gear casing		OBSOLETE PART
41	803360	1	Gasket		
42	950586	2	Pin	15101	
43	833041	1	Bushing		SEE GROUP 2C, OBSOLETE PART
44	833496	1	Plug		MO 18347-, OBSOLETE PART
45	957191	1	Gasket		MO 18347-
46	833766	1	Hatch		MO 22019-, OBSOLETE PART
47	957175	1	Gasket		MO 22019-
48	16322	1	Plug		MO 22019-, OBSOLETE PART
49	897327	1	Gasket		
50	955273	3	Hexagon screw		L = 22 MM
	955274	1	Hexagon screw		L = 25 MM
51	192356	1	Hexagon screw		
52	941906	5	Spring washer		
	955892	1	Washer		

MD11C

REF	PART NO.	QTY	DESCRIPTION	SEE SEC.	NOTES
53	945295	1	Screw		L = 110 MM, OBSOLETE PART
54	943795	1	Hex. socket screw		L = 130 MM, OBSOLETE PART
55	192357	1	Screw		L = 115 MM, OBSOLETE PART
	959251	1	Hex. socket screw		MD11C/110S, L = 100 MM, OBSOLETE PART
	955331	1	Hexagon screw		L = 110 MM
56	955324	2	Hexagon screw		L = 60 MM
	955324	1	Hexagon screw		MD2B SPEC 867143, 867144., MD11C SPEC 867351., MD11C/HD-BT.
	946408	1	Screw		MD2B SPEC 867143, 867144., MD11C SPEC 867351., L = 75 MM, OBSOLETE PART
57	955332	1	Hexagon screw		L = 120 MM
	955331	1	Hexagon screw		L = 110 MM
	945295	2	Screw		MD11C/110S, OBSOLETE PART
58	955318	2	Hexagon screw		L = 30 MM
59	942336	8	Spring washer		
60	943835	1	Plug		MD2B SPEC 867143, 867144., MD11C SPEC 867351.
61	803834	1	End cover		MD11C/HD-BT., OBSOLETE PART
62	803227	1	Gasket		MD11C/HD-BT.
63	955319	4	Hexagon screw		MD11C/HD-BT.
64	942336	4	Spring washer		MD11C/HD-BT.
65	833521	1	Plug		OBSOLETE PART
66	957181	1	Gasket		
67	955894	4	Washer		MD11C SPEC 867420, MD11C/110S SPEC 867421.