MD11C

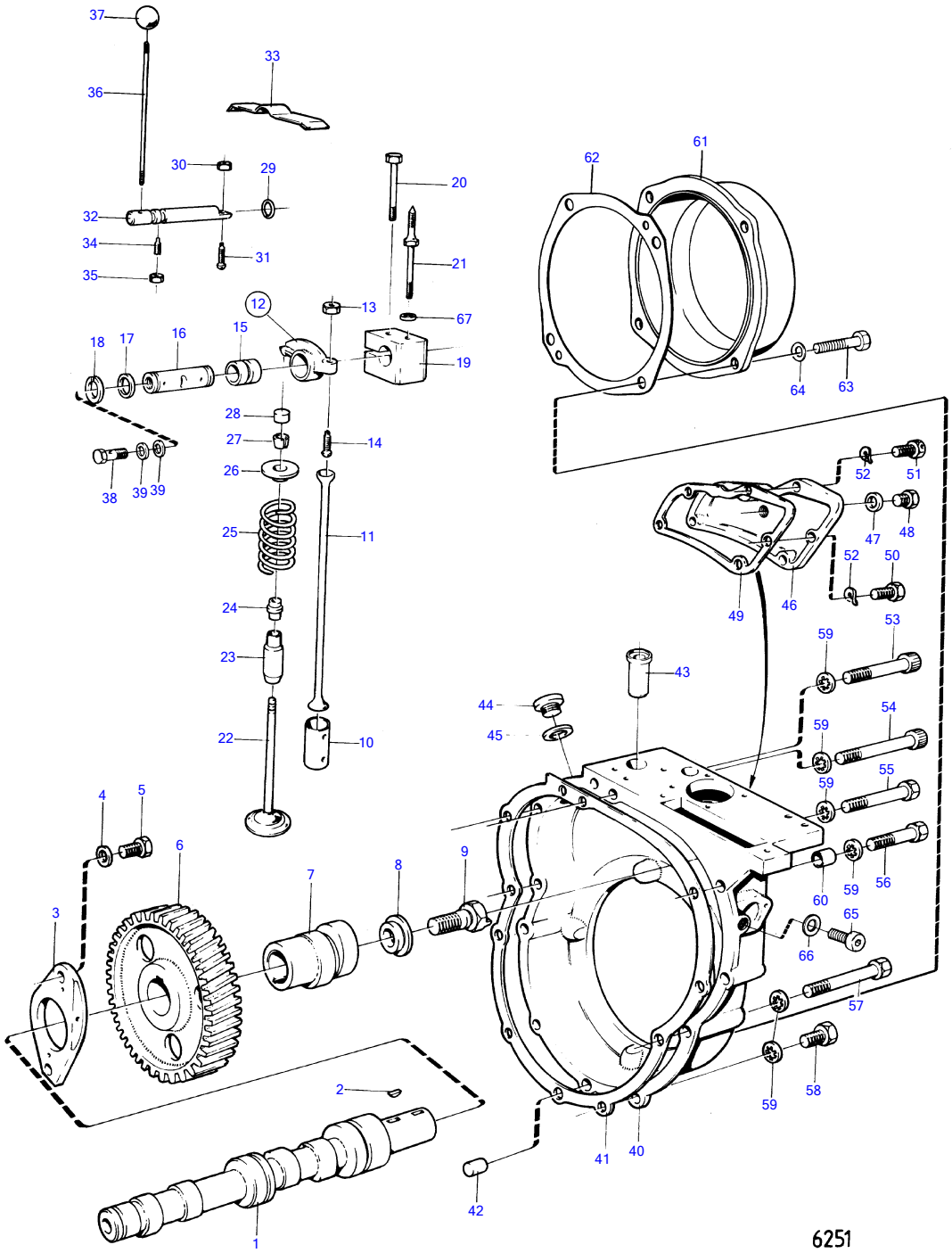
37
36
33
30
29
32
34
31
35
20
21
12
13
67
18
17
16
15
19
28
27
14
26
38
39
39
25
11
24
23
22
10
62
61
64
63
52
51
47
48
52
50
49
46
53
59
43
44
45
54
59
55
59
4
5
6
7
8
9
3
60
59
56
65
66
57
58
59
2
41
40
42
1
6251

MD11C

| REF | PART NO. | QTY | DESCRIPTION | SEE SEC. | NOTES |
|---|---|---|---|---|---|
| 1 | 833163 | 1 | Camshaft | | |
| 2 | 910121 | 2 | Woodruff key | | OBSOLETE PART |
| 3 | 405079 | 1 | Flange | | OBSOLETE PART |
| 4 | 15256 | 2 | Washer | | OBSOLETE PART |
| 5 | 955295 | 2 | Hexagon screw | | |
| 6 | 405026 | 1 | Gear | | OBSOLETE PART |
| 7 | 897248 | 1 | Cam disc | | OBSOLETE PART |
| 8 | 803348 | 1 | Guide washer | | OBSOLETE PART |
| 9 | 807031 | 1 | Screw | | SEE GROUP 2B, OBSOLETE PART |
| 10 | 807393 | 4 | Tappet | | |
| 11 | 403130 | 4 | Push rod | | |
| 12 | 403561 | 2 | Rocker arm, INTAKE | | OBSOLETE PART |
| | 803247 | 2 | Rocker arm, EXHAUST | | OBSOLETE PART |
| | 403560 | 2 | Rocker arm, EXHAUST | | MD11C SPEC 867420, MD11C/110S SPEC 867421., OBSOLETE PART |
| 13 | 955800 | 4 | · Hexagon nut | | OBSOLETE PART |
| 14 | 403155 | 4 | · Ball stud | | |
| 15 | 18146 | 4 | · Bushing | | |
| 16 | 833222 | 2 | Rocker arm shaft | | OBSOLETE PART |
| 17 | 191173 | 4 | Shim | | TH = 0.7mm, OBSOLETE PART |
| 18 | 914452 | 4 | Snap ring | | OBSOLETE PART |
| 19 | 833223 | 2 | Bearing box | | OBSOLETE PART |
| 20 | 955300 | 2 | Hexagon screw | | |
| 21 | 833569 | 2 | Screw | 15090 | |
| | 829723 | 2 | Screw | | MD11C SPEC 867420, MD11C/110S SPEC 867421. |
| 22 | 833188 | 2 | Valve | | |
| | 829620 | 2 | Exhaust valve | | |
| 23 | 419653 | 2 | Valve guide, INTAKE | 15090 | |
| | 829867 | 2 | Guide sleeve, EXHAUST | 15090 | |
| 24 | 1306630 | 2 | Valve stem seal, INTAKE | | (833347) |
| 25 | 829622 | 4 | Valve spring | | |
| 26 | 403314 | 4 | Valve spring washer | | |
| 27 | 403315 | 8 | Lock | | |
| 28 | 896580 | 4 | Valve cap | | |
| 29 | 925053 | 2 | O-ring | | |
| 30 | 955800 | 2 | Hexagon nut | | OBSOLETE PART |
| 31 | 403155 | 2 | Ball stud | | |
| 32 | 833499 | 2 | Shaft | | MO 12822-, OBSOLETE PART |
| 33 | 803604 | 2 | Spring | | OBSOLETE PART |
| 34 | 919118 | 2 | Set screw | | OBSOLETE PART |
| 35 | 955781 | 2 | Hexagon nut | | |
| 36 | 945292 | 2 | Stud | | MO 12823- |
| 37 | 940344 | 2 | Wing nut | | MO 12823- |
| 38 | 74033 | 2 | Hollow screw | 15091 | |
| 39 | 957171 | 4 | Gasket | | |
| | | | | 15091 | |
| 40 | | 1 | TIMING GEAR COVER | | REPLACED BY TIMING GEAR COVER 829654 + PLUG 833521 + PACKING 957181., EARLY TYPE |
| | 829654 | 1 | Timing gear casing | | OBSOLETE PART |
| 41 | 803360 | 1 | Gasket | | |
| 42 | 950586 | 2 | Pin | 15101 | |
| 43 | 833041 | 1 | Bushing | | SEE GROUP 2C, OBSOLETE PART |
| 44 | 833496 | 1 | Plug | | MO 18347-, OBSOLETE PART |
| 45 | 957191 | 1 | Gasket | | MO 18347- |
| 46 | 833766 | 1 | Hatch | | MO 22019-, OBSOLETE PART |
| 47 | 957175 | 1 | Gasket | | MO 22019- |
| 48 | 16322 | 1 | Plug | | MO 22019-, OBSOLETE PART |
| 49 | 897327 | 1 | Gasket | | |
| 50 | 955273 | 3 | Hexagon screw | | L = 22 MM |
| | 955274 | 1 | Hexagon screw | | L = 25 MM |
| 51 | 192356 | 1 | Hexagon screw | | |
| 52 | 941906 | 5 | Spring washer | | |
| | 955892 | 1 | Washer | | |
| | | | | | |

MD11C

| REF | PART NO. | QTY | DESCRIPTION | SEE SEC. | NOTES |
|---|---|---|---|---|---|
| 53 | 945295 | 1 | Screw | | L = 110 MM, OBSOLETE PART |
| 54 | 943795 | 1 | Hex. socket screw | | L = 130 MM, OBSOLETE PART |
| 55 | 192357 | 1 | Screw | | L = 115 MM, OBSOLETE PART |
| | 959251 | 1 | Hex. socket screw | | MD11C/110S, L = 100 MM, OBSOLETE PART |
| | 955331 | 1 | Hexagon screw | | L = 110 MM |
| 56 | 955324 | 2 | Hexagon screw | | L = 60 MM |
| | 955324 | 1 | Hexagon screw | | MD2B SPEC 867143, 867144., MD11C SPEC 867351., MD11C/HD-BT. |
| | 946408 | 1 | Screw | | MD2B SPEC 867143, 867144., MD11C SPEC 867351., L = 75 MM, OBSOLETE PART |
| 57 | 955332 | 1 | Hexagon screw | | L = 120 MM |
| | 955331 | 1 | Hexagon screw | | L = 110 MM |
| | 945295 | 2 | Screw | | MD11C/110S, OBSOLETE PART |
| 58 | 955318 | 2 | Hexagon screw | | L = 30 MM |
| 59 | 942336 | 8 | Spring washer | | |
| 60 | 943835 | 1 | Plug | | MD2B SPEC 867143, 867144., MD11C SPEC 867351. |
| 61 | 803834 | 1 | End cover | | MD11C/HD-BT., OBSOLETE PART |
| 62 | 803227 | 1 | Gasket | | MD11C/HD-BT. |
| 63 | 955319 | 4 | Hexagon screw | | MD11C/HD-BT. |
| 64 | 942336 | 4 | Spring washer | | MD11C/HD-BT. |
| 65 | 833521 | 1 | Plug | | OBSOLETE PART |
| 66 | 957181 | 1 | Gasket | | |
| 67 | 955894 | 4 | Washer | | MD11C SPEC 867420, MD11C/110S SPEC 867421. |