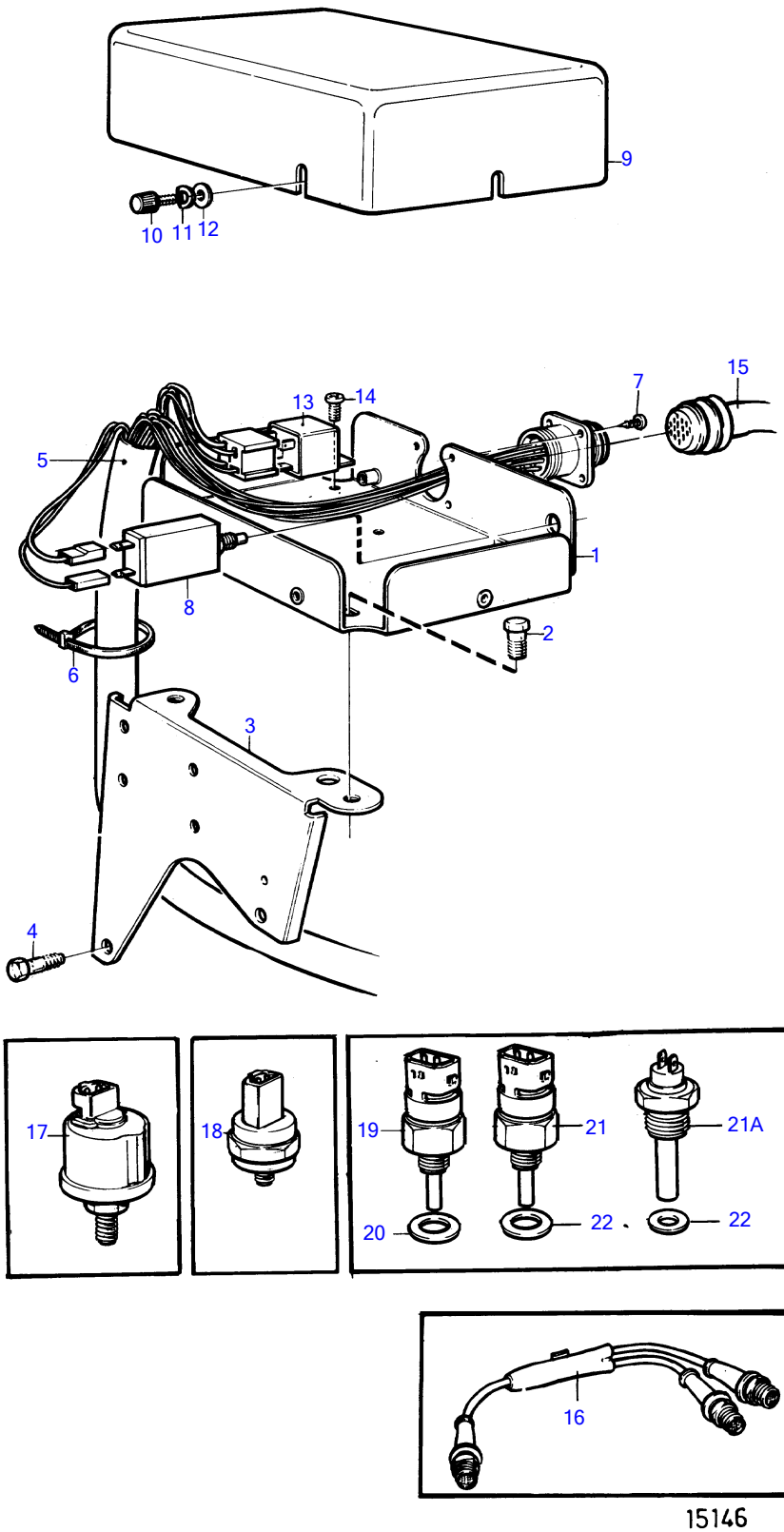
9
10
11
12
13
14
7
15
5
1
8
2
6
3
4
17
18
19
21
21A
20
22
22
16
15146

TAMD42B

| REF | PART NO. | QTY | DESCRIPTION | SEE SEC. | NOTES |
|---|---|---|---|---|---|
| 1 | 860417 | 1 | Bracket | | |
| 2 | 965175 | 2 | Flange screw | | |
| 3 | 860611 | 1 | Bracket | | |
| 4 | 947760 | 1 | Flange screw | | L=40mm |
| | 948217 | 1 | Flange screw | | L=45mm |
| 5 | 873552 | 1 | Wiring harness | | (873056) |
| 6 | 948210 | X | Cable tie | | |
| 7 | 955119 | 4 | Cross recessed screw | | |
| 8 | 966689 | 2 | Fuse | | |
| 9 | (860779) | 1 | Cover | | Obsolete part |
| 10 | 846736 | 3 | Lock screw | | |
| 11 | 941904 | 3 | Spring washer | | |
| 12 | 960137 | 3 | Washer | | |
| 13 | 860339 | 1 | Relay | | 12V 50A |
| | 872300 | 1 | Relay | | (853545) 12V 30A |
| 14 | 955138 | 2 | Cross recessed screw | | |
| 15 | 846648 | 1 | Extension cable'verl | | L=3.0m |
| | 846649 | 1 | Extension cable'verl | | L=5.0m |
| | 846650 | 1 | Extension cable'verl | | L=7.0m |
| 16 | 1140598 | X | Distributing contact | | For double steering positions. |
| 17 | 866835 | 1 | Sensor, oil-engine | | 0-10BAR |
| | | | ▪ Bulletin P-38-6-1 | P-38-6-1-EN | Vibration Damping Kit |
| 17 | 866836 | 1 | Sensor, oil-engine | | For double instruments., Alt,0-10bar |
| 18 | 863169 | 1 | Pressure monitor, oil pressure | | 0,7bar |
| 19 | 862250 | 1 | Thermo monitor, coolant water temp. | | 97°C |
| 20 | 957181 | 1 | Gasket | | |
| 21 | 862154 | 1 | Temperature sensor, coolant water temp. | | Early type |
| | 862567 | 1 | Temperature sensor, coolant water temp. | | For double instruments., Alt |
| 21A | 843325 | 1 | Temperature sensor, coolant water temp. | | Late type |
| 21 | 840074 | 1 | Temperature sensor, coolant water temp. | | For double instruments., Alt, max 120°C |
| 22 | 957181 | 1 | Gasket | | |