KAD42A, KAMD42A

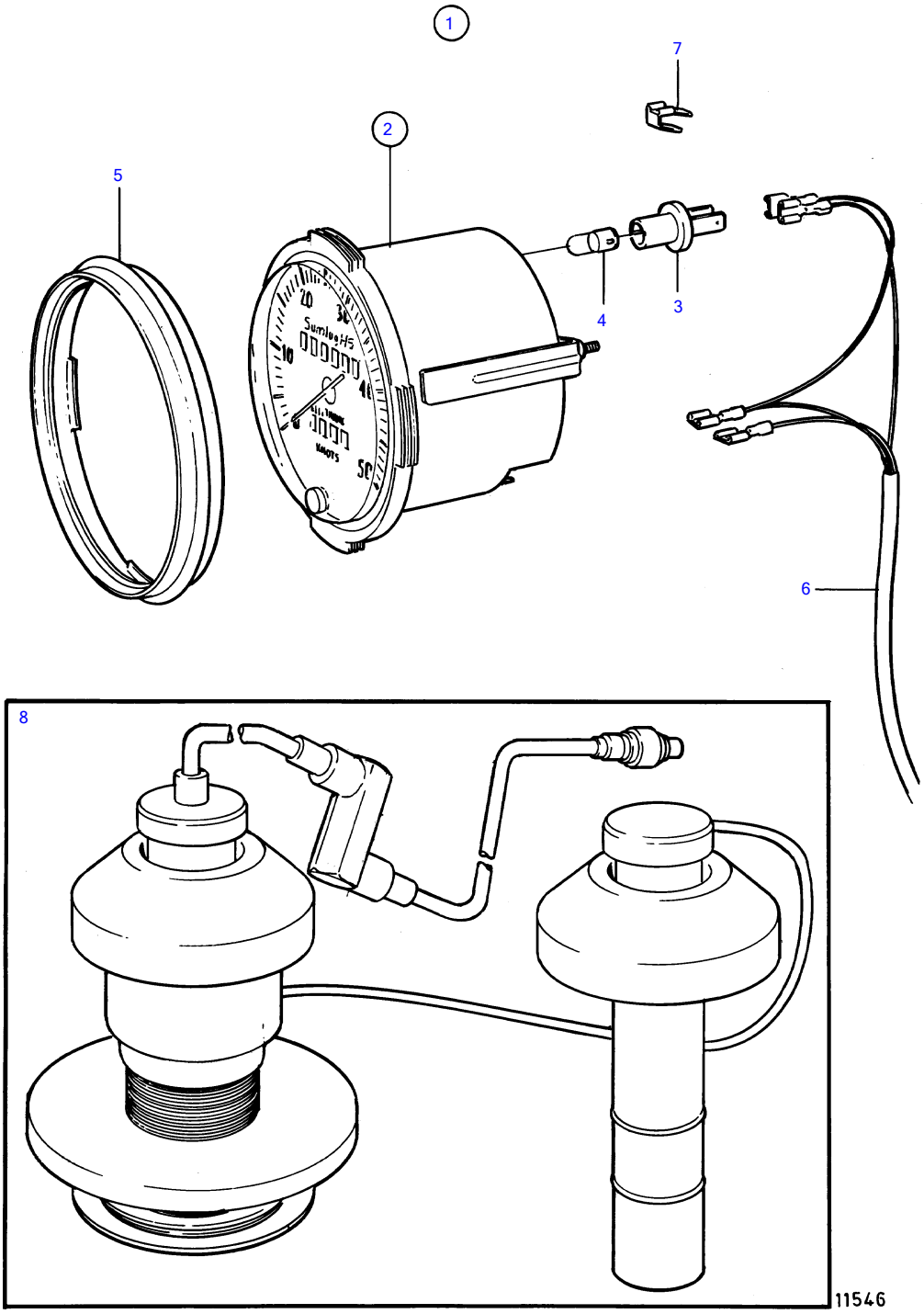

KAD42A, KAMD42A

REF	PART NO.	QTY	DESCRIPTION	NOTES
1	(1140430)	1	Electronic log kit	Obsolete part
2	(856806)	1	・Electronic log	Obsolete part
3	808175	1	・・Lamp socket	
4	19923	1	・・Bulb	
5	856805	1	・Ring	
6	(856862)	1	・Cable kit	Obsolete part
7	943950	1	・Switch	For diesel
8	(856817)	1	・Connector kit	To be installed through the bottom of the boat., Obsolete part