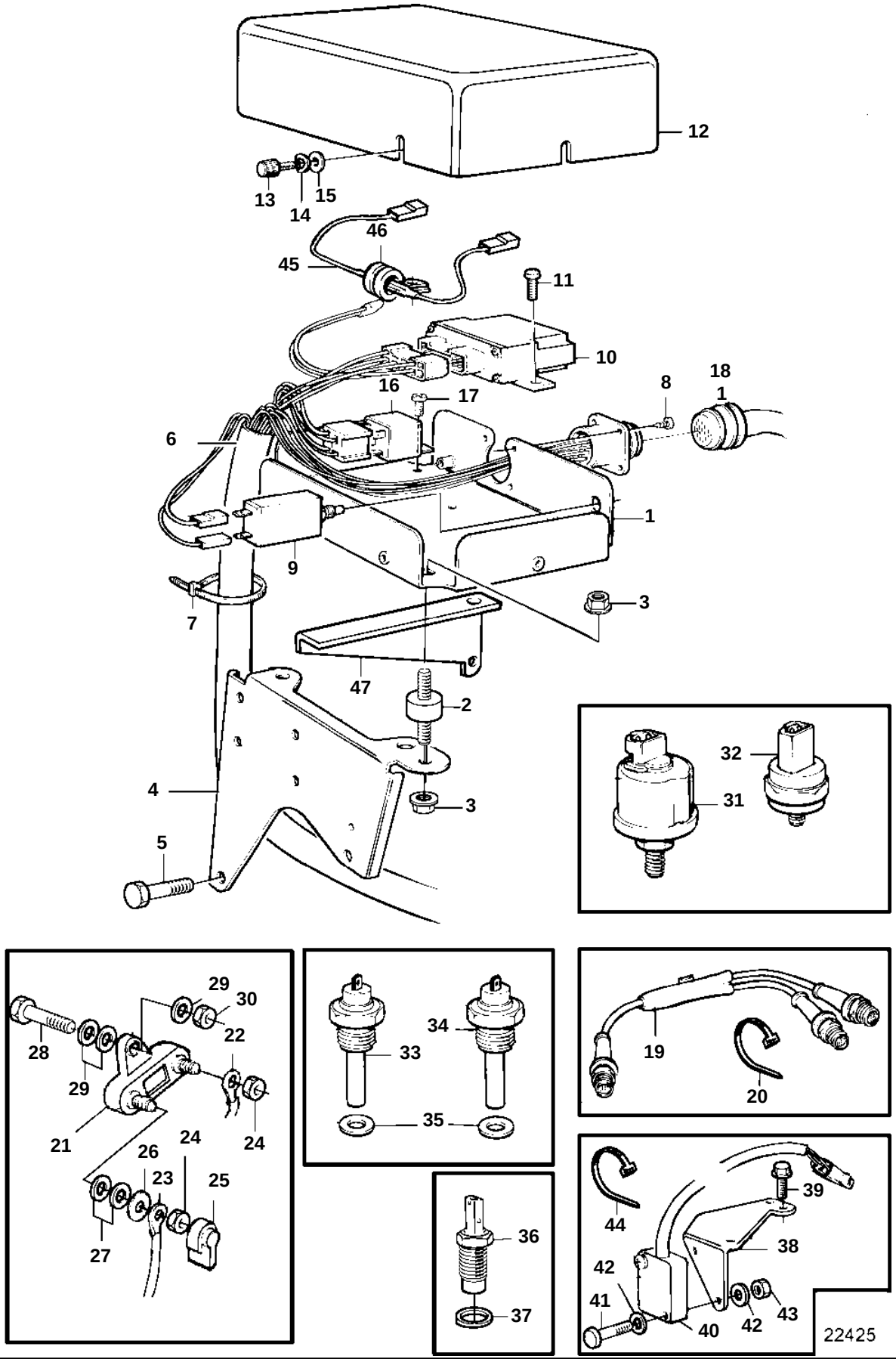
12
13
14
15
46
45
11
10
16
17
8
18
1
6
1
9
3
7
47
2
4
3
5
32
31
29
30
22
28
29
21
24
24
26
23
25
27
34
33
35
19
20
36
37
39
44
38
42
41
40
42
43
22425

REF	PART NO.	QTY	DESCRIPTION		NOTES
1	3581402	1	Bracket		
2	1348141	3	Absorber		
3	945407	6	Flange nut		
4	3581530	1	Bracket		
5	947760	1	Flange screw		L=40mm
	948217	1	Flange screw		L=45mm
6	873742	1	Wiring harness		
7	948211	X	Strip clamp		
8	955119	4	Screw		
9	966689	1	Fuse		
10	881797	1	Rotation speed relay, rpm		(872616)
11	968476	2	Flange screw		
12	860779	1	Cover		
13	846736	3	Lock screw		
14	941904	3	Spring washer		
15	960137	3	Washer		
16	873740	1	Relay		12V 40A
17	968476	1	Flange screw		
18	846648	X	Extension cable		L=3,0m
	846649	X	Extension cable		L=5,0m
	846650	X	Extension cable		L=7,0m
	873838	X	Extension cable		L=9,0m
	873839	X	Extension cable		L=11,0m
19	1140598	1	Y-koppling		For double steering positions.
20	948211	3	Strip clamp		
31	866835	1	Pressure sensor, oil-engine		0-10bar
	866836	1	Pressure sensor, oil-engine		ALT,0-10bar. For double steering positions.
32	863169	1	Pressure monitor, oil-pressure		0,7bar
33	873066	1	Thermo monitor, coolant water temp.		97°C
34	827151	1	Temperature sensor, coolant water temp.		40-120°C
	840074	1	Temperature sensor, coolant water temp.		ALT, 120°C. For double steering positions.
35	957181	2	Gasket		
36	862251	1	Tachometer sensor		For revolution relay.
37	957181	1	Gasket		
38	860970	1	Bracket		
39	946544	2	Flange screw		
40	874498	1	Position sensor, rpm		(872597)
41	956050	2	Screw		
42	955890	4	Washer		
43	966650	2	Lock nut		
44	948211	X	Strip clamp		
45	873717	1	Resistor		LATE TYPE
46	952627	1	Clamp		
47	3581444	1	Bracket		