TMD31B,TAMD31B,AD31B

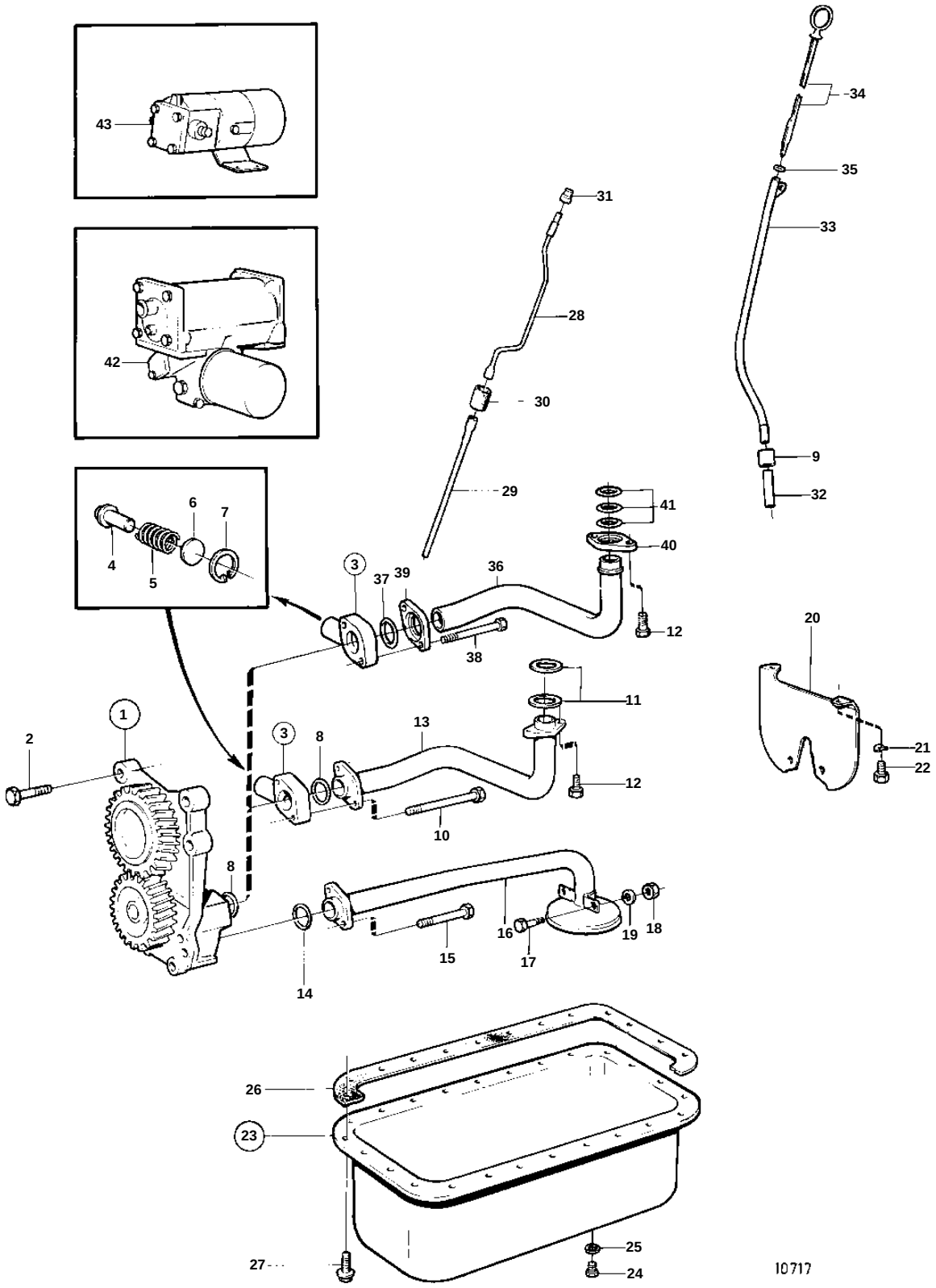

TMD31B,TAMD31B,AD31B

REF	QTY	DESCRIPTION		SEE SEC.	NOTES
42	X	OIL FILTER AND INSTALLATION COMPONENTS		02A-5150	
43	X	• EL. OIL SUMP PUMP			SEE GROUP 9