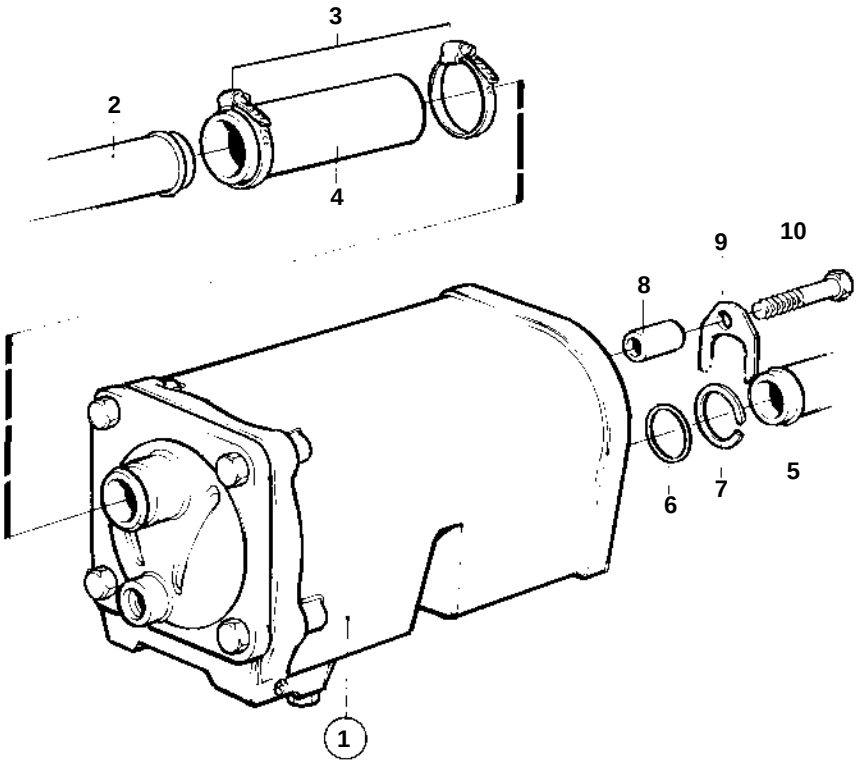

9730

REF	PART NO.	QTY	DESCRIPTION		SEE SEC.	NOTES
1	859525	1	Oil cooler			SN2203113776-
					02B-1350	
2	838819	1	Coolant pipe			OIL COOLER-AFTER COOLER
3	943475	2	Hose clamp			
4	944386	1	Hose			
5	838973	1	Coolant pipe			STRAINER-OIL COOLER