D2-75A, D2-75B, D2-75C, D2-75F

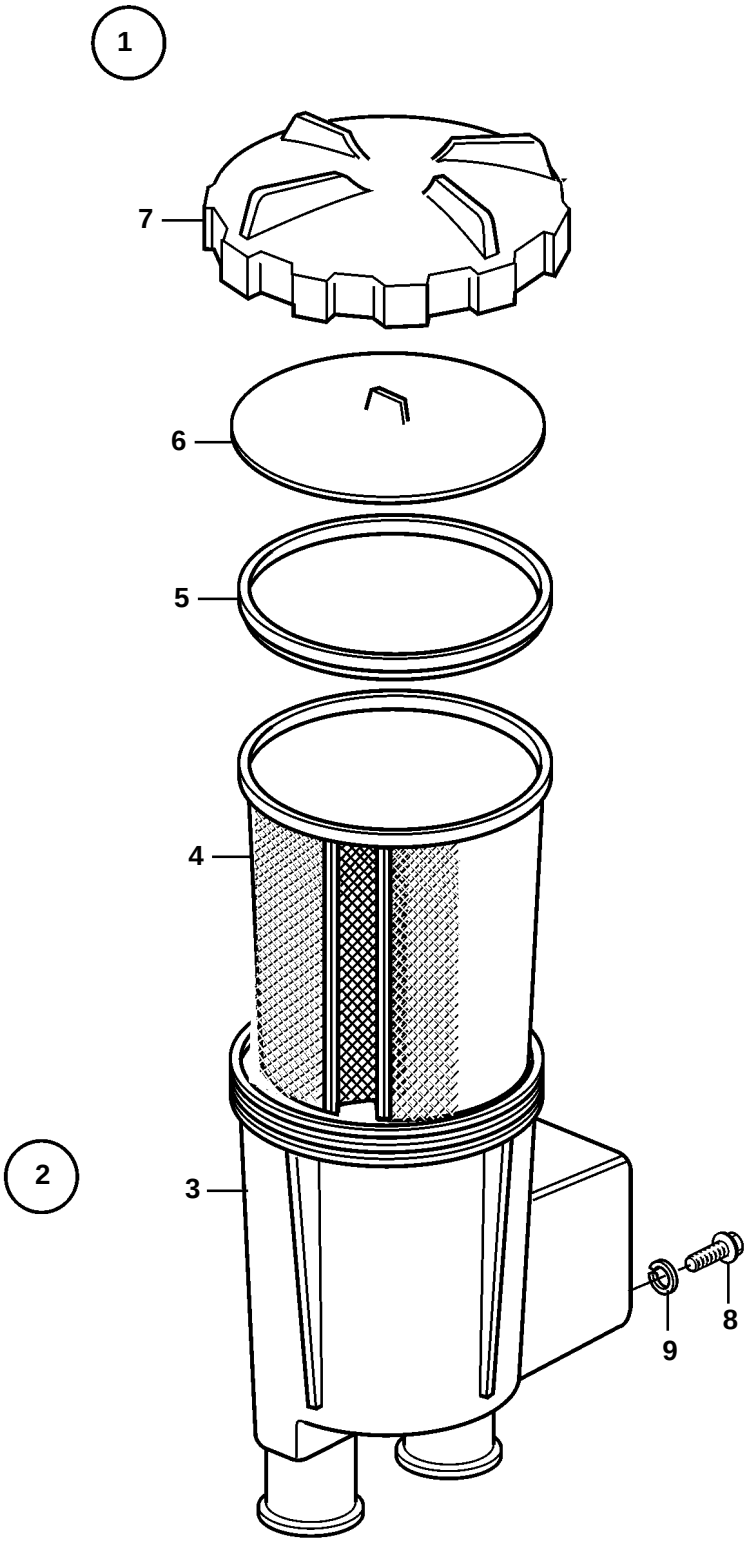

18977

D2-75A, D2-75B, D2-75C, D2-75F

REF	PART NO.	QTY	DESCRIPTION
1	3583840	1	Sea water filter
2	860631	1	· Sea water filter
3		1	· · Strainer housing
4	860687	1	· · Strainer
5	842724	1	· · Sealing
6	842982	1	· · Pressure plate
7	842722	1	· · Cover
8	965215	4	· Flange screw
9	941907	4	· Spring washer