Wet Exhaust Pipe Elbow with Riser

D11A-A, D11A-B, D11A-C

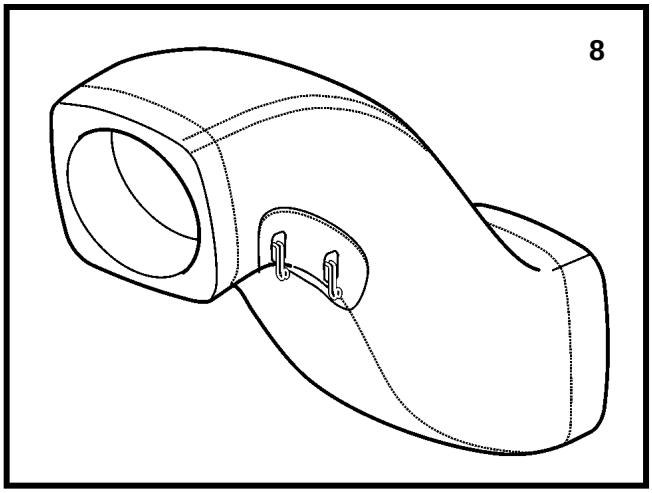

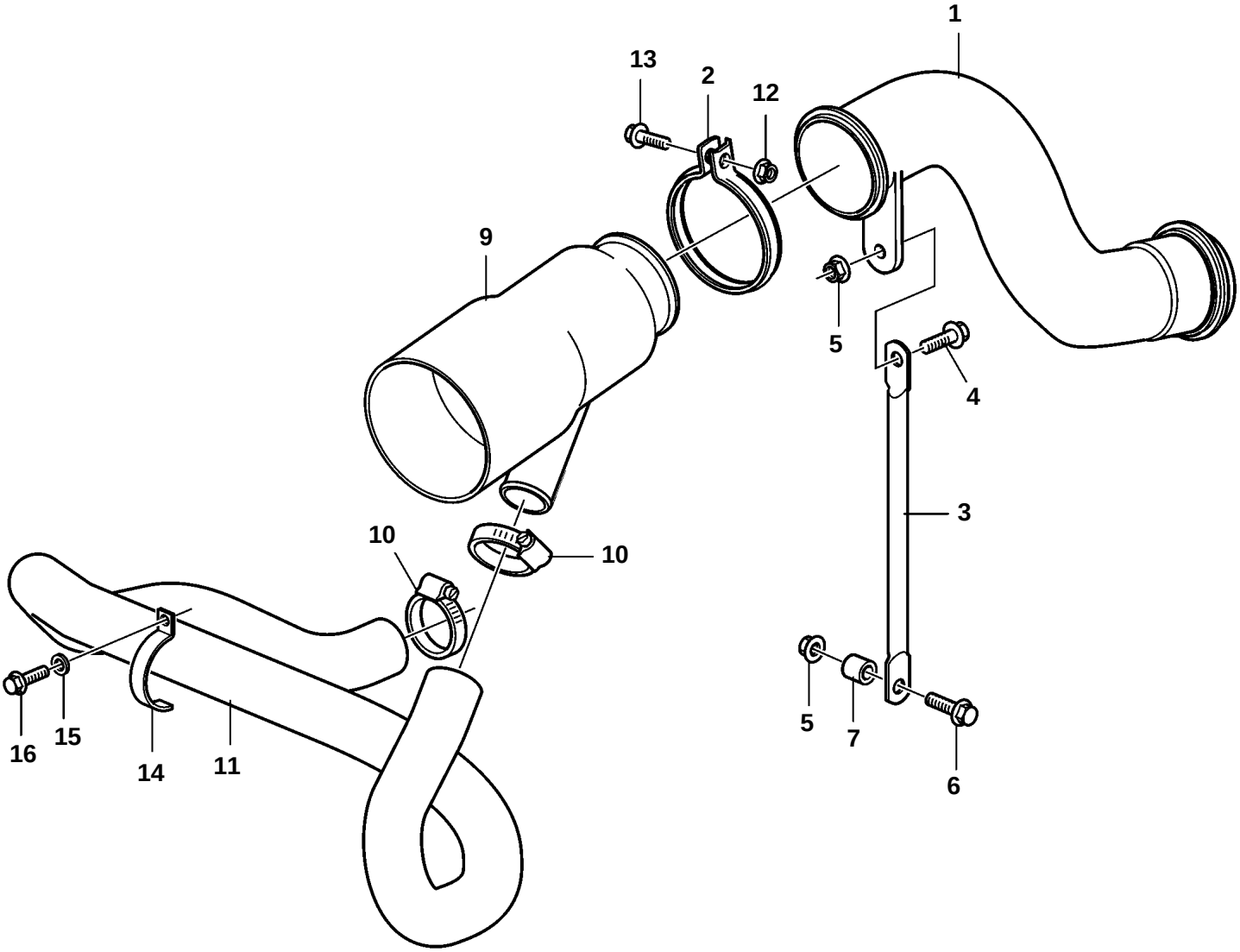

24160

D11A-A, D11A-B, D11A-C

REF	PART NO.	QTY	DESCRIPTION
1	3817976	1	Exhaust riser
2	1556930	1	Clamp
3		1	Stay
4	946472	1	Flange screw
5	971098	2	Flange lock nut
6	965221	1	Flange screw
7	855773	1	Spacer sleeve
8	3818149	1	Exhaust pipe protect
9	3842183	1	Exhaust pipe
10	961672	2	Hose clamp
11	40005350	1	Hose
12	973924	1	Flange screw
13	948645	1	Flange lock nut
14	948560	2	Clamp
15	960142	2	Washer
16	967949	2	Flange screw