2003

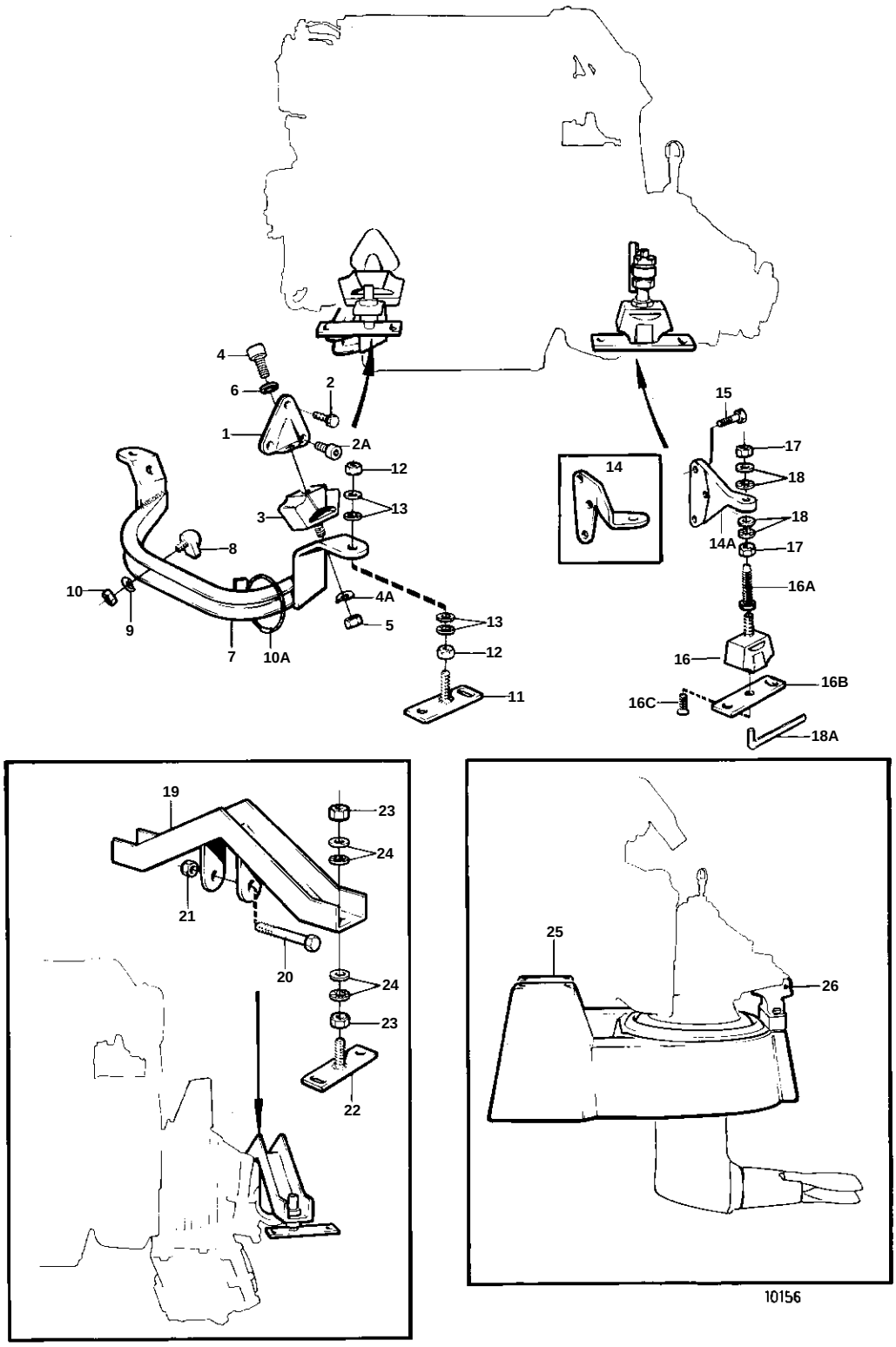
4
6
2
1
2A
12
13
3
8
10
9
7
10A
4A
5
13
12
11
14
15
17
18
18
14A
17
16A
16
16B
16C
18A
19
23
24
21
20
24
23
22
25
26
10156

2003

REF	PART NO.	QTY	DESCRIPTION		NOTES
1	840701	2	Engine mountings		
2	970945	4	Screw		
2A	959236	2	Screw		
3	840845	2	Rubber element		SN-16681
	840845	1	Rubber element		P SN16682-
	840912	1	Rubber element		S.B SN16682-. REPLACED BY 1EA RUBBER ELEMENT 840845 AND 1EA MOVEMENT LIMITER 840911
					SN-2300028623
	840845	1	Rubber element		S.B, SN2300028624-
4	959236	2	Screw		L = 20 MM
4A	941908	2	Spring washer		
5	971071	2	Nut		
6	940109	2	Lock washer		
7	859898	1	Engine bracket		
8	840829	2	Rubber element		
9	941906	2	Spring washer		
10	955781	2	Nut		
10A	840911	1	Bracket		
11	840348	2	Adjusting plate		
12	955821	4	Nut		
13	829892	8	Lock washer		
25	852573	1	Engine bed		
26		X	OTHER COMPONENTS		SEE GROUP 4C